ConnectCore 8M Mini

System-on-Module

Hardware Reference Manual

Revision history—90002454

Revision	Date	Description
L	January 2023	Changed the power group of the following pads from 3V3 to 1V8: D5, D6, D7, D8, D9, D10, D11, D12, D13, D14, G18, F26 and F27; marked pad AM8 as NC; added 3V3_RF note to Output power rails section; corrected MCA IO table (MCA_IO18 not ADC-capable), corrected contradictory VDD_SAI1 description.
M	June 2023	Added note on NXP i.MX8M Errata e50080.
N	December 2023	Added graphic showing location of pin 1; added Socket options topic.
P	January 2026	Modified data for pads AJ27 and AJ28; fixed typo in Socket part number; modified pad AJ12; modified signal name for pads V1, W1, E29 and F28; added comment to pad AG19; fixed e-TEC socket part numbers to include revision.
R	October 2026	Corrected miscellaneous formatting items; removed inconsistent coplanarity values.

Trademarks and copyright

Digi, Digi International, and the Digi logo are trademarks or registered trademarks in the United States and other countries worldwide. All other trademarks mentioned in this document are the property of their respective owners.

© 2021-2026 Digi International Inc. All rights reserved.

Disclaimers

Information in this document is subject to change without notice and does not represent a commitment on the part of Digi International. Digi provides this document “as is,” without warranty of any kind, expressed or implied, including, but not limited to, the implied warranties of fitness or merchantability for a particular purpose. Digi may make improvements and/or changes in this manual or in the product(s) and/or the program(s) described in this manual at any time.

Warranty

To view product warranty information, go to the following website:

www.digi.com/howtobuy/terms

Customer support

Gather support information: Before contacting Digi technical support for help, gather the following information:

Product name and model

Product serial number (s)

Firmware version

Operating system/browser (if applicable)

Logs (from time of reported issue)

Trace (if possible)

Description of issue

Steps to reproduce

Contact Digi technical support: Digi offers multiple technical support plans and service packages. Contact us at +1 952.912.3444 or visit us at www.digi.com/support.

Feedback

To provide feedback on this document, email your comments to

techcomm@digi.com

Include the document title and part number (ConnectCore 8M Mini System-on-Module Hardware Reference Manual, 90002454 R) in the subject line of your email.

Contents

About the ConnectCore 8M Mini

Features and functionality 6
Safety instructions 9
Variants 9
Block diagram 10
- ConnectCore 8M Mini module 10
- NXP i.MX8M Mini application processor 11

Power supply architecture 12
- Input power supply 12
- Electrical characteristics 13
- System power-up sequence 15
- Reference power architecture scheme 15

Bootstrap 17
- Boot from fuses 17
- Internal boot 17
- Serial downloader 18

Wireless interfaces 18
- WLAN 802.11a/b/g/n/ac 18
- Modulation and data rates 19
- RF channels 21
- Receive sensitivity 23
- Transmit power 24
- Bluetooth 27

Micro Controller Assist (MCA) 27
- MCA reset control 27
- MCA IOs 29
- MCA digital IOs 29
- MCA IRQs 30
- MCA analog-to-digital converter (ADC) 30
- MCA external voltage reference 30
- MCA external 32 kHz clock output 30
- MCA watchdog 30
- MCA real-time clock 31
- MCA pulse width modulation (PWM) 31
- MCA keypad 31
- MCA LED controller 32
- MCA power management 32
- MCA firmware update 35

CryptoAuthentication device 35

Module pinout and IOMUX table

External signals and pin multiplexing 39
Castellated pad signals and multiplexing 40
LGA signals and multiplexing 50

Module specifications

Power consumption 91
Power consumption use cases 91
Results 91
Environmental specifications 92
Mechanical specifications 92
Antenna performance 92
MTBF 93
Socket options 93

Assembly instructions

Moisture sensitivity and shelf life 96
Mounting 96
Stencil 96
SMT process parameter reference - Castellation and LGA applications 96
Reflow oven profile 97

Regulatory information and certifications

United States FCC 100
Labeling requirements 100
Maximum power and frequency specifications (FCC) 100
FCC notices 101
FCC-approved antennas 101
RF exposure 103
Operating frequency 103
Europe and UK 103
CE mark 104
CE and UKCA OEM labeling requirements 104
Declarations of Conformity 105
Approved antennas 105
Canada (IC) 106
Canadian Notice 107
Labeling requirements 107
Transmitters with detachable antennas 107
RF exposure 108
Approved antennas 108
Japan 108
Approval Label (MIC Marking) 109
Bluetooth 110

About the ConnectCore 8M Mini

The ConnectCore 8M Mini module delivers a secure and extremely cost-effective connected System-on-Module platform. Its innovative Digi SMTplus™ (patent-pending) surface mount form factor allows you to choose simplified design integration leveraging proven and easy-to-use edge-castellated SMT technology, or a versatile LGA option for ultimate design flexibility with access to virtually all interfaces. Built on the i.MX 8M Mini processor with power-efficient quad ARM® Cortex®-A53 and Cortex-M4 cores, Digi ConnectCore 8M Mini combines pre-certified wireless connectivity (802.11 a/b/g/n/ac and Bluetooth 5.0) with Digi TrustFence® and Digi Microcontroller Assist™.

Features and functionality

The ConnectCore for i.M8M Mini System-on-module is based on the i.MX 8M Mini processor from NXP. This processor offers a number of interfaces, most of them multiplexed and not available simultaneously.

The module has the following features:

- Single/Dual/Quad Cortex-A53 MPCore platform:
  - 32 KB L1 instruction cache
  - 32 KB L1 data cache
  - Media Processing Engine (MPE) with Arm NEON technology supporting the Advanced Single Instruction Multiple Data architecture
  - Floating Point Unit (FPU) with support of the Arm VFPv4-D16 architecture
  - Support of 64-bit Arm v8-A architecture
  - 512 KB unified L2 cache
  - On-chip memory:
    - Boot ROM (256KB)
    - On-chip RAM (256KB + 32KB)
- Cortex-M4 core platform:
  - 16 KB L1 instruction cache
  - 16 KB L1 data cache
  - 256 KB tightly coupled memory (TCM)
  - Low-power standby mode
  - IoT features including Weave
  - Manage IR or wireless remote
- Connectivity:

- x1 PCIe Express (PCIe)
- x2 USB 2.0 OTG controllers with integrated PHY interfaces
- x3 Ultra Secure Digital Host Controller (uSDHC) interfaces
- x1 Gigabit Ethernet controller
- x4 Universal Asynchronous Receiver/Transmitter (UART) modules
- x4 I2C modules
- x3 SPI modules
- x1 Quad SPI
- 4x PWM channels

- Multimedia
  - Video Processing Unit:
    - 1080p60 VP9 Profile 0, 2 (10-bit)
    - 1080p60 HEVC/H.265 Decoder
    - 1080p60 AVC/H.264 Baseline, Main, High decoder
    - 1080p60 VP8
    - 1080p60 AVC/H.264 Encoder
    - 1080p60 VP8
    - TrustZone support
  - Graphic Processing Unit:
    - GCNanoUltra for 3D acceleration
    - GC320 for 2D acceleration
  - LCDIF display controller, supporting up to 1080p60 display through MIPI DSI and up to 2 layers of overlay
  - 4-lane MIPI DSI interface
  - 4-lane MIPI CSI interface
  - Audio:
    - S/PDIF input and output, including a raw capture input mode
    - Five Synchronous Audio Interface (SAI) modules supporting I2S, AC97, TDM, codec/DSP and DSD interfaces:
      - x1 with 8 Tx and 8 Rx lanes
      - x1 with 4 Tx and 4 Rx lanes
      - 2x with 2 Tx and 2 Rx lanes
      - x1 with 1Tx and 1 Rx lanes
    - 8-Channel Pulse Density Modulation (PDM) input
- Security
  - Resource Domain Controller (RDC), supporting four domains and up to eight regions of DDR
  - Arm Cortex-A53 MPCore TrustZone support
  - On-chip RAM (OCRAM) secure region protection using OCRAM controller
  - High Assurance Boot (HAB)

    - Cryptographic acceleration and assurance module (CAAM):
        - Support Widevine and PlayReady content protection
        - Public Key Cryptography (PKHA) with RSA and Elliptic Curve (ECC) algorithms
        - Real-time integrity checker (RTIC)
        - DRM support for RSA, AES, 3DES, DES
        - Side channel attack resistance
        - True random number generation (RNG)
        - Manufacturing protection support
    - Secure non-volatile storage (SNVS), with secure real-time clock (RTC)
    - Secure JTAG controller (SJC)
- Up to 2 GB, 32-bit LPDDR4-3200 memory
- Up to 8 GB, 8-bit eMMC memory
- NXP PCA6450A power management IC (PMIC):
    - x6 DC/DC buck converters
    - x5 LDO regulators
- CryptoAuthentication device
- 1x1 SISO IEEE802.11 a/b/g/n/ac
- Bluetooth 5.0
- Debug interfaces:
    - 5-pin JTAG debug interface
    - Single Wired Debug (SWD) interface for the MCA
- ARM Cortex-M0+ Micro Controller Assist™ (MCA) subsystem:
    - Cortex-M0+ core operates up to 48 MHz
    - Power and reset control
    - RTC
    - Peripherals:
        - x1 UART operating up to 1.5 Mbit/s
        - x2 low-power UART modules supporting asynchronous operation in low-power modes
        - x2 I2C modules supporting up to 1 Mbit/s
        - x2 16-bit SPI modules supporting up to 24 Mbit/s for SPI1 and 12 Mbit/s for SPI0
        - x1 FlexIO module supporting emulation of additional UART, SPI, I2C, I2S, PWM, and other serial modules
        - x1 16-bit ADC module with high accurate internal voltage reference, up to 20 channels and up to 818 ksps at equal to or less than 13-bit mode
        - High-speed analog comparator containing a 6-bit DAC for programmable reference input

Safety instructions

- The ConnectCore 8M Mini module cannot be guaranteed operation due to the radio link and so should not be used for interlocks in safety critical devices such as machines or automotive applications.
- The ConnectCore 8M Mini module has not been approved for use in (this list is not exhaustive):
  - nuclear applications
  - explosive or flammable atmospheres
- There are no user serviceable components inside the ConnectCore 8M Mini module. Do not remove the shield or modify the ConnectCore 8M Mini in any way. Modifications may exclude the module from any warranty and can cause the ConnectCore 8M Mini to operate outside of regulatory compliance for a given country, leading to the possible illegal operation of the radio.
- Use industry standard ESD protection when handling the ConnectCore 8M Mini module.
- Take care while handling to avoid electrical damage to the PCB and components.
- Do not expose ConnectCore 8M Mini module to water or moisture.
- Use this product with the antennas specified in the ConnectCore 8M Mini module user guides.
- The end user must be told how to remove power from the ConnectCore 8M Mini module or to locate the antennas 20 cm from humans or animals.

Variants

See the ConnectCore 8M Mini product page for information on available variants.

Block diagram

ConnectCore 8M Mini module

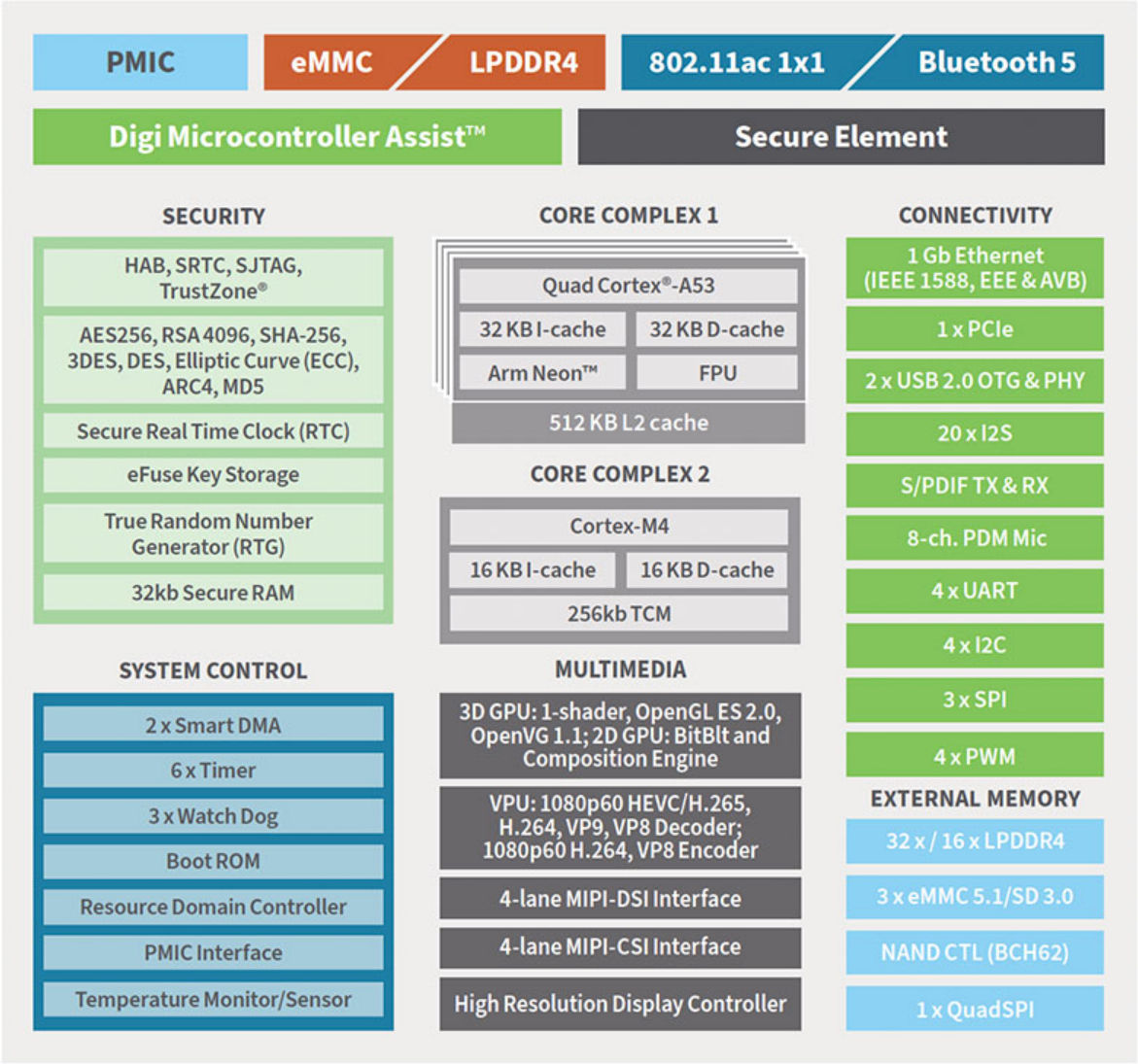

NXP i.MX8M Mini application processor

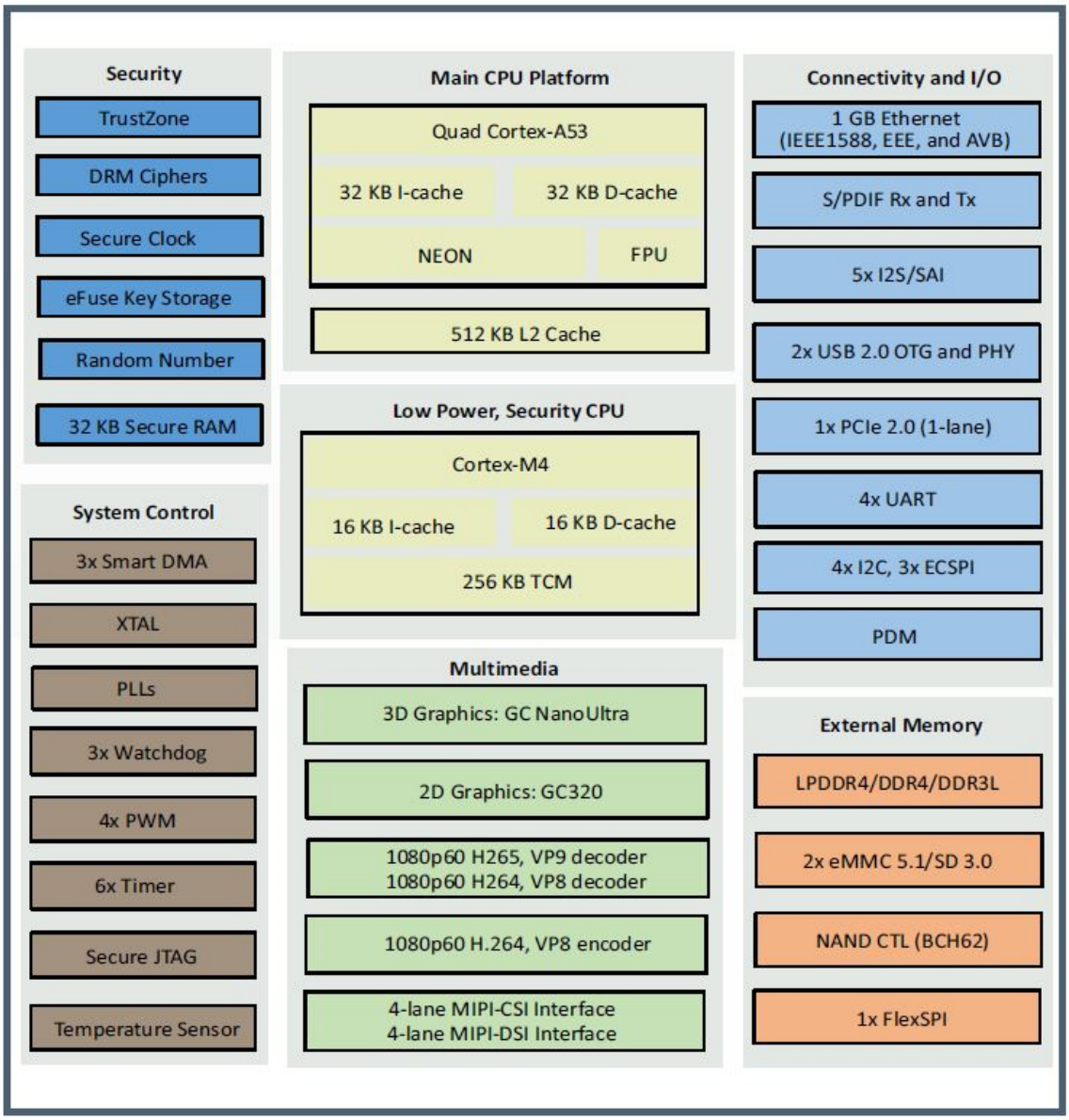

Power supply architecture

Input power supply

The ConnectCore for i.MX 8M Mini requires two primary power supply inputs: VSYS and VSYS2. These supply units are the input power supply to the on-module NXP PCA9450A power management IC (PMIC). Some of the PMIC regulators are internally dedicated to powering the module, while others power external circuitry.

The following table summarizes the PMIC regulators of the ConnectCore 8M Mini SOM:

PMIC Regulator	Power rail name	Input power supply	Internally used	Externally available	Comments
BUCK1	-	VSYS2	YES	NO	
BUCK2	-	VSYS2	YES	NO	
BUCK3	-	VSYS2	YES	NO	
BUCK4	3V3	VSYS	YES	YES	General purpose 3.3V power rail for external circuitry. Also used internally in the SOM.
BUCK5	1V8	VSYS2	YES	YES	General purpose 1.8V power rail for external circuitry. Also used internally in the SOM.
BUCK6	-	VSYS2	YES	NO	
LDO1	-	VSYS2	YES	NO	
LDO2	-	VSYS2	YES	NO	
LDO3	VDDA_ 1V8	VSYS2	YES	YES	Do not use this regulator externally unless otherwise noted.
LDO4	-	VSYS2	YES	NO	
LDO5	MUX_ 3V3_1V8	VSYS2	NO	YES	Dedicated regulator for powering external circuitry.

In addition to the input power supplies of the PMIC, other power domains of the SOM must be set externally. This allows flexibility in power management so the input voltage of the different interfaces can be adjusted.

The following table lists the input power rails that must be set externally to the SOM, together with the devices/power domains they power:

Input rail	Device powered	Internal power domains powered	Description
VCC_MCA	Micro Controller Assist	Full device	Input power supply for the on-module MCA. This power domain is mandatory.
VDD_USDHC2	i.MX 8M Mini CPU	NVCC_SD2	Input power supply for the USDHC2 interface. This interface is typically connected to a microSD socket, which also allows booting from the microSD card. Digi recommends you tie this power domain to a flexible power supply so it can work at its highest speed by adjusting input voltage level.
VDD_ENET	i.MX 8M Mini CPU	NVCC_ENET	Input power supply for ENET interface, including the MDIO bus.
VDD_UART	i.MX 8M Mini CPU	NVCC_UART	Input power supply for the UART interfaces: UART1, UART2, UART3 and UART4.
VDD_SAI1	i.MX 8M Mini CPU	NVCC_SAI1	Input power supply for the SAI1 interface. Only applies to i.MX 8M Mini; it is unconnected in the i.MX 8M Nano.

Electrical characteristics

Input power rails

The following table lists the electrical specifications of the input power rails:

Device	SOM power rail		Input voltage (V)		
			Min.	Typ.	Max.
PMIC	**VSYS**		3.7	-	5.5
	VSYS2		3.7	-	5.5
MCA	**VCC_MCA**		1.71	-	3.6
CPU	**VDD_ENET**	**1.8 V mode**	1.65	1.8	1.95
		2.5 V mode	2.25	2.50	2.75
		3.3 V mode	3.00	3.30	3.60
	VDD_USDHC2 VDD_UART	**1.8 V mode**	1.65	1.8	1.95
		3.3 V mode	3.00	3.30	3.60

Output power rails

The following table lists the electrical specifications of the output power rails:

Buck/Regulator	SOM power rail	Used internally in the SOM	Accuracy		Maximum output current (mA)	Slew rate
			Min	Max		
BUCK4	3V3	YES	-0.5%	+0.5%	3000	12.5 mV/us
BUCK5	1V8	YES	-0.5%	+0.5%	2000	12.5 mV/us
LDO3	VDDA_1V8	YES	-3%	+3%	300	15 mV/us
LDO5	MUX_3V3_1V8	NO	-3%	+3%	150	15 mV/us

- These parameters are defined at 25°C.
- Note that the maximum output current involves both external and internal circuitry. For those regulators that are used internally in the SOM, the current available outside will be lower.

Note There is one additional power domain of the CPU which is connected to the module LGA pads: 3V3_RF. This power supply is internally tied to 3V3. Unless otherwise noted, leave this pad unconnected.

For a complete description of the electrical characteristics of the different output power rails (PMIC regulators), see the NXP PCA9540 Datasheet.

System power-up sequence

When the power supply is connected to the ConnectCore 8M Mini module, the PMIC and the MCA are the first components to be powered up. VSYS and VSYS2 are the PMIC input power supplies, while VCC_MCA is the Micro Controller Assist input power line:

- The MCA starts to run as soon as it is powered up. After a certain programmable time, it will release the PWR_ON line of the PMIC (PMIC power on/off).
- When the PMIC is switched on, it starts an initialization process as determined by its OTPs.

Finally, the reset line of the CPU, which is controlled by both the CPU and the MCA, is released. The following time diagram shows the power-up sequence:

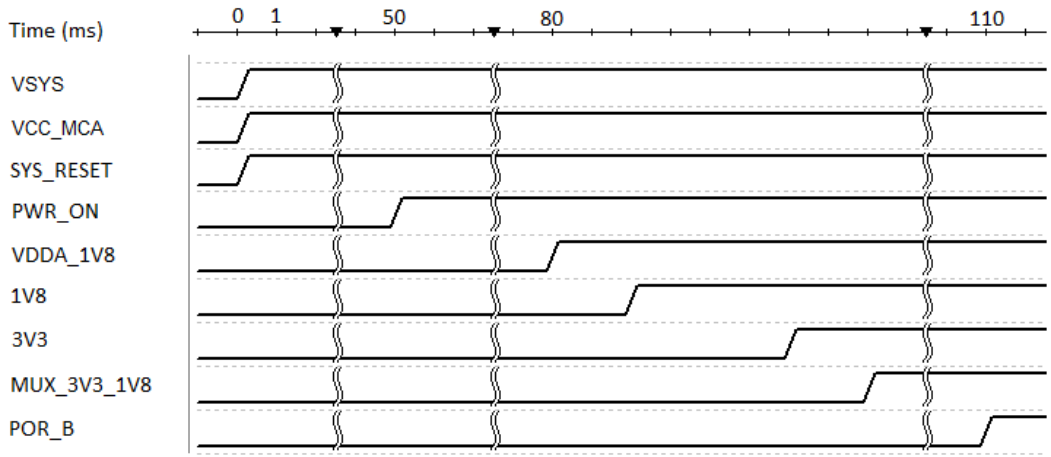

Reference power architecture scheme

The following diagram represents the power architecture of the ConnectCore 8M Mini module in a typical application:

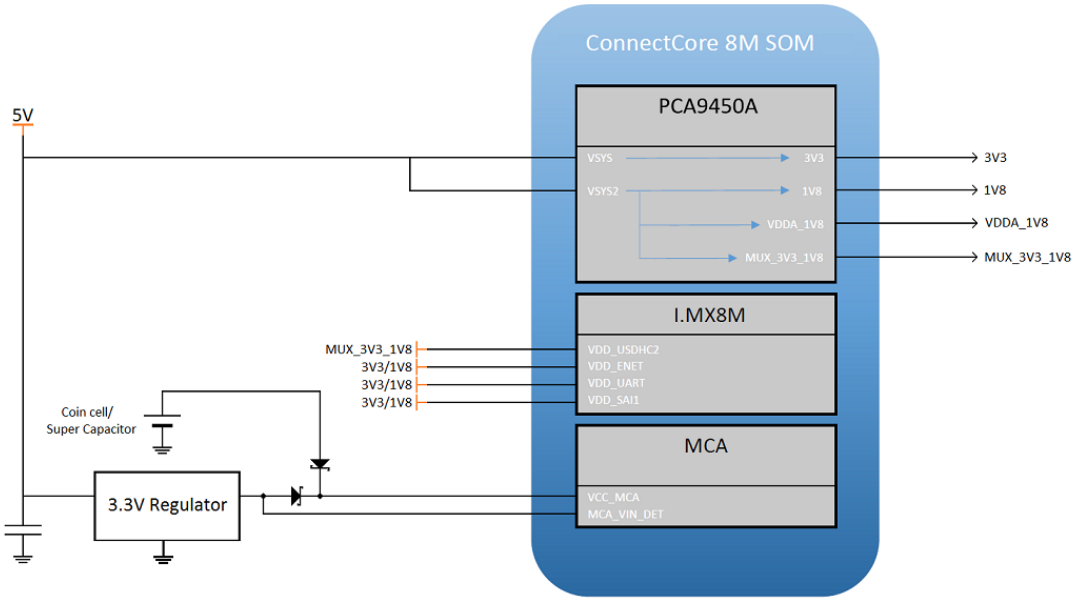
ConnectCore 8M SOM
PCA9450A
VSYS
3V3
VSYS2
1V8
VDDA_1V8
MUX_3V3_1V8
3V3
1V8
VDDA_1V8
MUX_3V3_1V8
5V
I.MX8M
VDD_USDHC2
VDD_ENET
VDD_UART
VDD_SAI1
MUX_3V3_1V8
3V3/1V8
3V3/1V8
3V3/1V8
Coin cell/
Super Capacitor
MCA
VCC_MCA
MCA_VIN_DET
3.3V Regulator

Bootstrap

The ConnectCore 8M Mini module can be configured to boot from different devices and interfaces as determined by the Boot ROM. The configuration of the booting process of the CPU is done through:

- n BOOT_MODE register, which selects the boot mode of the processor.
- n eFUSEs and/or GPIOs, which determine the boot configuration.

Four boot modes are available on the i.MX8 8M Mini processor. Selection between them is done through BOOT_MODE[1:0] bits. The bits are externally configurable on two processor IOs, whose values are latched during boot-up:

Boot from fuses

Boot from fuses is the recommended boot mode for production purposes. When this boot mode is selected, you must configure several parameters to select and configure the boot device of the system. These parameters are configured through fuses, which are burned in order to set their values. **This means that the configuration is irreversible.**

There are many registers that configure the different boot devices. For a complete description of the booting configuration, see the NXP i.MX 8M Mini Applications Processor Reference Manual (Chapter 6: SNVS, Reset, Fuse, and Boot).

Internal boot

Internal boot is the recommended boot mode for development purposes. When this boot mode is selected, the selection and configuration of the booting process is done through the same registers used when booting from fuses. However, this time the value of the BOOT_CFG[15:0] register is overridden using multiple GPIOs, which are latched during power-up:

BOOT_CFG	GPIO
BOOT_CFG0	SAI1_RXD0
BOOT_CFG1	SAI1_RXD1
BOOT_CFG2	SAI1_RXD2
BOOT_CFG3	SAI1_RXD3
BOOT_CFG4	SAI1_RXD4
BOOT_CFG5	SAI1_RXD5
BOOT_CFG6	SAI1_RXD6
BOOT_CFG7	SAI1_RXD7
BOOT_CFG8	SAI1_TXD0
BOOT_CFG9	SAI1_TXD1
BOOT_CFG10	SAI1_TXD2

BOOT_CFG	GPIO
BOOT_CFG11	SAI1_TXD3
BOOT_CFG12	SAI1_TXD4
BOOT_CFG13	SAI1_TXD5
BOOT_CFG14	SAI1_TXD6
BOOT_CFG15	SAI1_TXD7

A value of 0x2867 in the BOOT_CFG[15:0] register selects the on-module eMMC as the boot device. Different values may be required for selecting different devices.

Note The following pads have internal 10K pull-up in the SOM:

- **Note** BOOT_CFG1
- **Note** BOOT_CFG2
- **Note** BOOT_CFG5
- **Note** BOOT_CFG6
- **Note** BOOT_CFG11
- **Note** BOOT_CFG13

To change the default value of these lines during the boot sequence, tie them directly to ground.

The GPIOs used for overriding BOOT_CFG[15:0] are only available on LGA pads. This means that on a castellated based design, the eFuses must be burned to boot from internal eMMC.

Serial downloader

You can use the serial downloader boot mode for device recovery. The serial downloader allows you to download a program image to the chip through USB connection. When any of the standard boot modes is selected but the booting process doesn't succeed (for instance due to wrong booting device or corrupted images) the CPU automatically jumps to the serial downloader boot mode.

Wireless interfaces

The ConnectCore 8M Mini system-on-module combines a wireless local area network (WLAN) and Bluetooth dual solution to support SISO 1x1 IEEE802.11 a/b/g/n/ac WLAN standards and Bluetooth 5.0, enabling seamless integration of WLAN/Bluetooth and Low Energy technology.

The following sections include specifications for the wireless interfaces available on the ConnectCore 8M Mini module.

WLAN 802.11a/b/g/n/ac

The 2.4 GHz band on the ConnectCore 8M Mini module supports 20/40 MHz bandwidths, and the 5 GHz band supports 20/40/80 MHz bandwidths.

Modulation and data rates

The following tables list modulation values for the ConnectCore 8M Mini module, which supports the following WLAN standards:

Mode	Modulation & Coding	Rate
802.11b	DBPSK	1 Mbps
	DQPSK	2 Mbps
	CCK	5.5 Mbps
	CCK	11 Mbps
802.11ga	BPSK-1/2	6 Mbps
	BPSK-3/4	9 Mbps
	QPSK-1/2	12 Mbps
	QPSK-3/4	18 Mbps
	16QAM-1/2	24 Mbps
	16QAM-3/4	36 Mbps
	64QAM-2/3	48 Mbps
	64QAM-3/4	54 Mbps
802.11n	BPSK-1/2	MCS0
	QPSK-1/2	MCS1
	QPSK-3/4	MCS2
	16QAM-1/2	MCS3
	16QAM-3/4	MCS4
	64QAM-2/3	MCS5
	64QAM-3/4	MCS6
	64QAM-5/6	MCS7

Mode	Modulation & Coding	Rate
802.11ac	BPSK-1/2	MCS0
	QPSK-1/2	MCS1
	QPSK-3/4	MCS2
	16QAM-1/2	MCS3
	16QAM-3/4	MCS4
	64QAM-2/3	MCS5
	64QAM-3/4	MCS6
	64QAM-5/6	MCS7
	256QAM-3/4	MCS8
	256QAM-5/6	MCS9

Data rates

Data rate (Mbps) - Non Short Guard Interval (Non-SGI)

Data rate (Mbps)		802.11b		802.11ga		802.11n		802.11ac		
Modulation		**DBPSK**	**CCK**	**BPSK-1/2**	**64QAM-3/4**	**BPSK-1/2**	**64QAM-5/6**	**BPSK-1/2**	**64QAM-5/6**	**256QAM-5/6**
		1 Mbps	**11 Mbps**	**6 Mbps**	**54 Mbps**	**MCS0**	**MCS7**	**MCS0**	**MCS7**	**MCS9**
2.4 GHz	**HT20**	1	11	6	54	6.5	65	6.5	65	-
	HT40	-	-	-	-	13.5	135	13.5	135	180
5 GHz	**HT20**	-	-	6	54	6.5	65	6.5	65	-
	HT40	-	-	-	-	13.5	135	13.5	135	180
	HT80	-	-	-	-	-	-	29.3	292.5	390

Data rate (Mbps) - Short Guard Interval (SGI)

Data rate (Mbps)		802.11b		802.11ga		802.11n		802.11ac		
Modulation		DBPSK	CCK	BPSK-1/2	64QAM-3/4	BPSK-1/2	64QAM-5/6	BPSK-1/2	64QAM-5/6	256QAM-5/6
		1 Mbps	11 Mbps	6 Mbps	54 Mbps	MCS0	MCS7	MCS0	MCS7	MCS9
2.4 GHz	HT20	1	11	6	54	7.2	72.2	7.2	72.2	-
	HT40	-	-	-	-	15	150	15	150	200
5 GHz	HT20	-	-	6	54	7.2	72.2	7.2	72.2	-
	HT40	-	-	-	-	15	150	15	150	200
	HT80	-	-	-	-	-	-	32.4	325	433.3

RF channels

The ConnectCore 8M Mini module supports the following frequency bands.

RF Band	Channel BW	Channel Spacing	Channel Number (Center freq. MHz)
2.4 GHz	20 MHz	5 MHz	1(2412), 2(2417), 3(2422), 4(2427), 5 (2432), 6(2437), 7(2442), 8(2447), 9 (2452), 10(2457), 11(2462), 12 (2467),13(2472), 14(2484)
	40 MHz	5 MHz	3(2422), 11(2462)
5 GHz	20 MHz	20 MHz	36(5180), 40(5200), 44(5220), 48 (5240), 52(5260), 56(5280), 60 (5300),64(5320), 100(5500), 104(5520), 108(5540), 112(5560), 116(5580), 120 (5600), 124(5620), 128(5640), 132 (5660), 136(5680), 140(5700), 144 (5720), 149(5745), 153(5765), 157 (5785), 161(5805), 165(5825)
	40 MHz	40 MHz	38(5190), 46(5230), 54(5270), 62 (5310), 102(5510), 110(5550), 118 (5590), 126(5630), 134(5670), 142 (5710), 151(5755), 159(5795)
	80 MHz	80 MHz	42(5210), 58(5290), 106(5530), 122 (5610), 138(5690), 155(5775)

2.4 GHz Band Channels (20 MHz BW)

Channel #	Center Freq. (MHz)	Europe (ETSI)	US (FCC)	Japan
1	2412	✓	✓	✓
2	2417	✓	✓	✓
3	2422	✓	✓	✓
4	2427	✓	✓	✓
5	2432	✓	✓	✓
6	2437	✓	✓	✓
7	2442	✓	✓	✓
8	2447	✓	✓	✓
9	2452	✓	✓	✓
10	2457	✓	✓	✓
11	2462	✓	✓	✓
12	2467	✓	No	✓
13	2472	✓	No	✓
14	2484	No	No	802.11b only

5 GHz Band Channels (20 MHz BW)

Channel #	Center Freq. (MHz)	Europe (ETSI)	US (FCC)	Japan
36	5180	Indoors	✓	✓
40	5200	Indoors	✓	✓
44	5220	Indoors	✓	✓
48	5240	Indoors	✓	✓
52	5260	Indoors / DFS / TPC	DFS	DFS / TPC
56	5280	Indoors / DFS / TPC	DFS	DFS / TPC
60	5300	Indoors / DFS / TPC	DFS	DFS / TPC
64	5320	Indoors / DFS / TPC	DFS	DFS / TPC
100	5500	DFS / TPC	DFS	DFS / TPC
104	5520	DFS / TPC	DFS	DFS / TPC
108	5540	DFS / TPC	DFS	DFS / TPC
112	5560	DFS / TPC	DFS	DFS / TPC

Channel #	Center Freq. (MHz)	Europe (ETSI)	US (FCC)	Japan
116	5580	DFS / TPC	DFS	DFS / TPC
120	5600	No Access	DFS	DFS / TPC
124	5620	No Access	DFS	DFS / TPC
128	5640	No Access	DFS	DFS / TPC
132	5660	DFS / TPC	DFS	DFS / TPC
136	5680	DFS / TPC	DFS	DFS / TPC
140	5700	DFS / TPC	DFS	DFS / TPC
144	5720	No Access	DFS	DFS / TPC
149	5745	SRD	✓	No Access
153	5765	SRD	✓	No Access
157	5785	SRD	✓	No Access
161	5805	SRD	✓	No Access
165	5825	SRD	✓	No Access

Note
DFS = Dynamic Frequency Selection
TPC = Transmit Power Control
SRD = Short Range Devices

Receive sensitivity

The following table lists typical receive sensitivity values for the ConnectCore 8M Mini module.

Mode		**802.11b**		**802.11ga**		**802.11n**		**802.11ac**		
Modulation		**DBPSK**	**CCK**	**BPSK-1/2**	**64QAM-3/4**	**BPSK-1/2**	**64QAM-5/6**	**BPSK-1/2**	**64QAM-5/6**	**256QAM-5/6**
		1 Mbps	**11 Mbps**	**6 Mbps**	**54 Mbps**	**MCS0**	**MCS7**	**MCS0**	**MCS7**	**MCS9**
2.4 GHz	HT20	-90	-88	-90	-75	-82	-64	-82	-64	-
	HT40	-	-	-	-	-79	-61	-79	-61	-54
5 GHz	HT20	-	-	-90	-75	-82	-64	-82	-64	-
	HT40	-	-	-	-	-79	-61	-79	-61	-54
	HT80	-	-	-	-	-	-	-76	-58	-51

Note Specification is subject to change

Transmit power

The following tables list the maximum transmit power values for the ConnectCore 8M Mini module.

FCC

TX output power settings (dBm)		802.11b				802.11ga				802.11ga/n - 802.11ac							
RF Band	CH BW	1 Mbps	5.5 Mbps	11(L) Mbps	11(S) Mbps	6-24 Mbps	36 Mbps	48 Mbps	54 Mbps	MCS0	MCS1/2	MCS3/4	MCS5	MCS6	MCS7	MCS8	MCS9
2.4 GHz	20 MHz	12	12	12	12	12	12	12	12	12	12	12	12	12	12	12	
	40 MHz									11	11	11	11	11	11	11	11
5 GHz	20 MHz					10	10	10	10	10	10	10	10	10	7	6	
	40 MHz									4	4	4	4	4	4	4	4
	80 MHz									2	2	2	2	2	2	2	2

ETSI

TX output power settings (dBm)		802.11b				802.11ga				802.11ga/n - 802.11ac							
RF Band	CH BW	1 Mbps	5.5 Mbps	11(L) Mbps	11(S) Mbps	6-24 Mbps	36 Mbps	48 Mbps	54 Mbps	MCS0	MCS1/2	MCS3/4	MCS5	MCS6	MCS7	MCS8	MCS9
2.4 GHz	20 MHz	8	8	8	8	11	11	11	11	11	11	11	11	11	11	11	
	40 MHz									12	12	12	12	12	12	12	12
5 GHz	20 MHz					11	11	11	10	11	11	11	11	10	7	6	
	40 MHz									11	11	11	11	9	8	7	5
	80 MHz									11	11	11	10	9	8	7	6

MKK

TX output power settings (dBm)		802.11b				802.11ga				802.11ga/n - 802.11ac							
RF Band	CH BW	1 Mbps	5.5 Mbps	11(L) Mbps	11(S) Mbps	6-24 Mbps	36 Mbps	48 Mbps	54 Mbps	MCS0	MCS1/2	MCS3/4	MCS5	MCS6	MCS7	MCS8	MCS9
2.4	20	12	12	12	12	16	16	16	14	16	16	16	16	15	13	12	

TX output power settings (dBm)		802.11b				802.11ga				802.11ga/n - 802.11ac							
GHz	MHz																
	40 MHz									16	16	16	16	15	14	14	13
5 GHz	20 MHz					7	7	7	7	8	8	8	8	8	7	6	
	40 MHz									7	7	7	7	7	7	7	5
	80 MHz									7	7	7	7	7	7	7	6

For ETSI regulatory, maximum output power is limited for channels 149 and above:

- 802.11a (20 MHz), 802.11n/ac (20 MHz) and 802.11ac (80MHz): 3dB
- 802.11n/ac (40MHz): 2dB

Note Due to manufacturing tolerance, these nominal output powers may be reduced up to 4 dB.

Bluetooth

The ConnectCore 8M Mini module supports both Bluetooth and Bluetooth Low Energy protocols:

- Bluetooth 5.0; backwards compatible with Bluetooth 1.X, 2.X + Enhanced Data Rate, Bluetooth 3.X, Bluetooth 4.X class 1 and class 2 power-level transmissions.
- Integrated WLAN-Bluetooth coexistence.

Micro Controller Assist (MCA)

The Micro Controller Assist, or MCA, is a small microcontroller that is deeply integrated into the design of the ConnectCore 8M Mini module. It assists the i.MX 8M Mini processor with advanced operations related to power management, security, and system reliability. The functionality provided by the MCA includes:

- Advanced power management such as power key button, wake up sources, and PMIC control in low power modes.
- Peripheral extensions such as RTC, watchdog, and tamper pins.

The MCA and the i.MX 8M Mini are connected through an I2C interface and an interrupt line. The microcontroller provides up to 15 general purpose IOs that can be configured with different modes to provide functionality such as digital input/output or ADC.

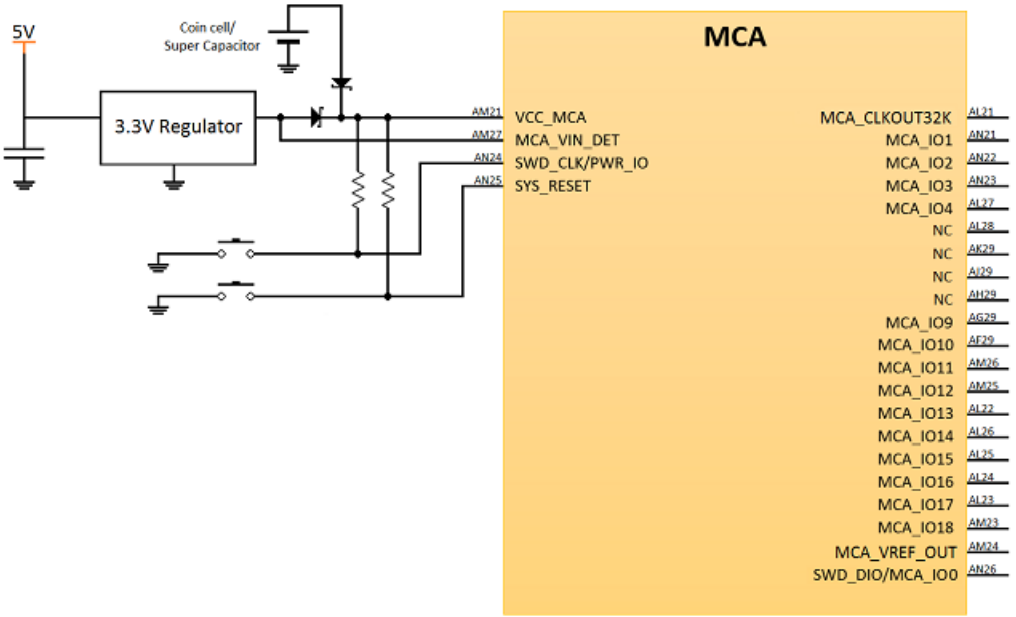

MCA reset control

The MCA, in cooperation with the PMIC, controls the reset line of the i.MX 8M Mini processor. The SYS_RESET pin is the main reset input of the ConnectCore 8M Mini module. This pin is a pseudo open-drain

with an internal pull up. Asserting the SYS_RESET line low sets the MCA into reset state, and it remains in this state until the line is de-asserted.

During system initialization, the MCA performs the following actions:

- Asserts the PMIC on/off line (PWR_ON) low for a configurable time (0 to 255 ms with a default value of 50 ms). This powers the PMIC off, switching off all regulated outputs of the PMIC. You can disable this power cycle by setting the timer to 0.
- Asserts the PMIC on/off line high to power the system on.
- Keeps the reset line of the CPU low for a configurable time.
- Releases the reset line of the CPU to allow firmware execution on the processor.

Note The CPU reset line is also connected to the PMIC. The PMIC won't release this line until it is switched on and the entire starting sequence is finished (a few ms after the latest regulator is turned on). This means that even if the MCA releases the reset line before the PMIC is ready, the CPU won't go out of reset.

The following time diagram represents the reset sequence:

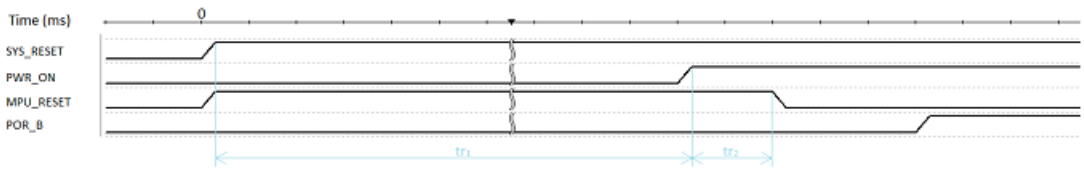

Where, by default:

- tr_1 = 35 ms
- tr_2 = 2 ms

See Electrical characteristics for more information.

Reset line internal connection

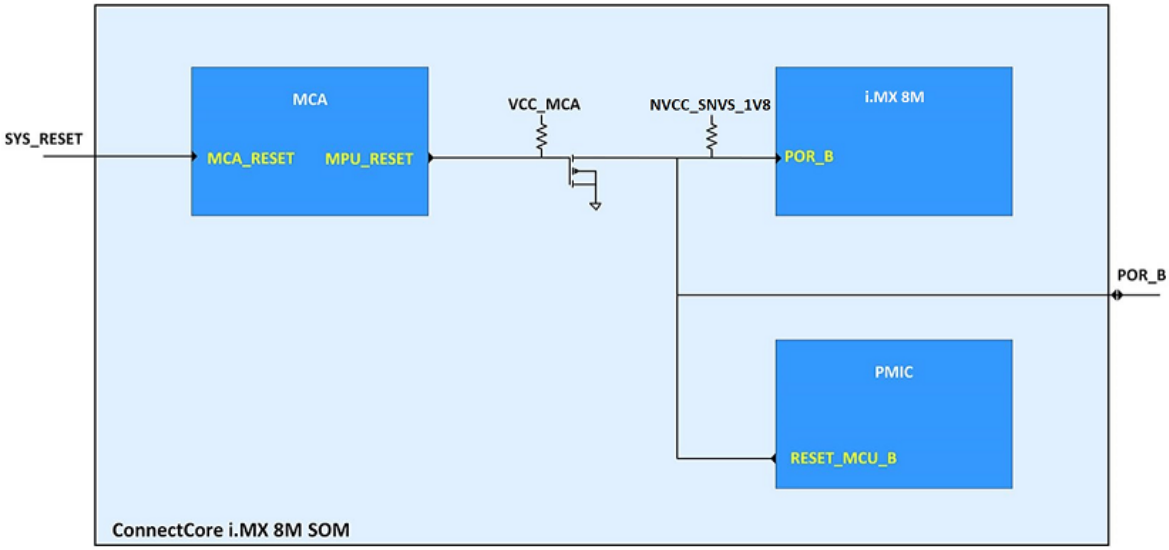

MCA IOs

The ConnectCore 8M Mini MCA provides up to 15 configurable IOs.

Because the general purpose IOs do not incorporate internal pull-ups or pull-downs, you may have to add these resistors on the carrier board.

The following table lists all available MCA IOs with their configurable capabilities:

MCA IO	Pad name (LGA / Castellated pads)	Digital I/O	IRQ capable	ADC	PWM capable IOs	Led control capable IOs	UART capable IOs	Keypad capable IOs
MCA_VREF_OUT	AM24							
MCA_CLKOUT32K	AL21					YES	YES	YES
SWD_DIO/MCA_IO0	AN26 / 57	YES	YES			YES		YES
MCA_IO1	AN21 / 52	YES	YES	YES	YES	YES	YES	YES
MCA_IO2	AN22 / 53	YES	YES	YES	YES	YES	YES	YES
MCA_IO3	AN23 / 54	YES	YES	YES		YES		YES
MCA_IO4	AL27 / 61	YES	YES	YES		YES		YES
MCA_IO9	AG29 / 66	YES	YES		YES	YES	YES	YES
MCA_IO10	AF29 / 67	YES	YES		YES	YES	YES	YES
MCA_IO11	AM26	YES	YES			YES	YES	YES
MCA_IO12	AM25	YES	YES		YES	YES		YES
MCA_IO13	AL22	YES	YES			YES	YES	YES
MCA_IO14	AL26	YES	YES	YES	YES	YES		YES
MCA_IO15	AL25	YES	YES		YES	YES		YES
MCA_IO16	AL24	YES	YES		YES	YES	YES	YES
MCA_IO17	AL23	YES	YES		YES	YES	YES	YES
MCA_IO18	AM23	YES	YES		YES	YES	YES	YES

MCA digital IOs

All MCA IOs can be configured as digital inputs/outputs, which are powered from the VCC_MCA power rail.

The digital outputs preserve their output values in all operating modes, except in power off and coin cell modes, where the IOs are reconfigured to high impedance state to preserve power.

MCA IRQs

You can configure the MCA IOs as interrupt inputs, using the MCA software to configure the active edge of the interrupt: rising, falling, or both. The firmware provides a configurable debounce filter for each GPIO that improves noise immunity and filters rebounds on push buttons. When one or more MCA IRQs are activated, the MCA interrupts the main processor through the corresponding IRQ line, signaling the active IRQs in the IRQ status registers. The IRQ inputs can wake the system from any low power mode (suspend or power off).

MCA analog-to-digital converter (ADC)

Many of the MCA IOs can be configured as analog-to-digital channels. The index of the MCA ADC channels corresponds to the index of the MCA IO. For example, the ADC channel 1 corresponds to the MCA_IO1, the ADC channel 2 to the MCA_IO2, and so on.

The result of the ADC conversion for a given input voltage is inversely proportional to the reference voltage of the ADC. For the MCA ADCs, the reference voltage corresponds to the VCC_MCA voltage. Note that the i.MX 8M Mini ADCs have a different reference voltage. The MCA ADC provides 12-bit resolution with right-justified, unsigned format output. These ADCs are suitable for low-frequency sampling (under 10 Hz). You can configure the MCA ADC lines to act as an analog window comparator and generate an IRQ depending on the voltage level in the input. This feature allows applications to be notified of this event instead of needing to periodically poll the input for its value.

See the MCA software documentation for additional information about how to configure and access the MCA IRQ lines.

MCA external voltage reference

The MCA_VREF_OUT pin provides an accurate voltage reference of 1.2 V that can be used to provide a reference voltage for sensors and/or analog devices (such as comparators or ADCs).

The MCA_VREF_OUT pin is disabled by default. You must use software to configure the pin for external voltage reference.

Note that the voltage reference continues normal operation in low-power modes (suspend and power off). If the voltage reference is enabled during normal operation but is not required for low power operation, Digi recommends you use the software to disable it before entering low power in order to minimize the power consumption, and re-enable it when resuming normal operation.

MCA external 32 kHz clock output

The MCA_CLKOUT32K pin is a 32.768 Hz square wave output that can be used as clock input by peripherals requiring a low-frequency, high-accuracy clock.

The 32 kHz clock output continues normal operation in low power modes (suspend and power off). Therefore, if the 32 kHz clock output is enabled during normal operation but is not required for low power operation, Digi recommends you use the software to disable it before entering low power in order to minimize power consumption, and re-enable it when resuming normal operation.

MCA watchdog

The MCA implements a watchdog timer in its firmware. The MCA watchdog resets the system, or only the i.MX 8M Mini CPU, if the software running on the main processor fails to execute properly and does not reset the watchdog timer on time.

The main features of the MCA watchdog include:

- Configurable timeout between 1 and 255 seconds.
- Configurable to generate interrupt or system reset.
- Configurable to generate full-system reset (including the MCA itsef) or CPU-only reset. Full-system reset can include a PMIC off/on, depending on the device configuration.

MCA real-time clock

The MCA implements a real-time clock (RTC) in its firmware. The i.MX 8M Mini internal CPU RTC is disabled by default because the MCA RTC is preferred due to its superior power consumption efficiency. To preserve the date during power-off, connect a coin cell battery following the design notes in Power supply architecture.

The main features of the MCA RTC include:

- Date/time registers to keep the system time (backed up by the coin cell battery).
- Programmable alarm to generate an interrupt. You can use the alarm to wake the system from low power modes (suspend and power off).

MCA pulse width modulation (PWM)

Pulse-width modulation (PWM) is a technique that modifies the duty cycle of a pulsing signal to encode information or to control the amount of energy provided to a charge. The MCA implements pulse-width modulation in its firmware.

The MCA on the ConnectCore 8M Mini system-on-module provides three PWM controllers. Each controller has several channels and each channel maps to one MCA IO pin:

PWM controller	Number of channels	Channel	IO
PWM0	6	0	MCA_IO0
		1	MCA_IO12
		2	MCA_IO15
		3	MCA_IO16
		4	MCA_IO17
		5	MCA_IO18

MCA keypad

The MCA implements a keypad controller capable of decoding up to 64 key switches in a matrix keyboard of maximum 8 rows x 8 columns. The controller detects each key press and release, and implements a configurable debounce filter that prevents the detection of undesirable events caused by switch bouncing. Additionally, the MCA can wake the system from low power modes (suspend to RAM and power off) from the keyboard if configured to do so.

The controller buffers the events in its internal memory, making it unlikely that events are lost due to heavy system load or interrupt latency. A standard Linux input driver is provided to access the keyboard events from user space applications.

Note Pull-ups are required. Every IO can be configured as either column or raw. See the ConnectCore 8M Mini software documentation for additional configuration options and information about how to perform pin assignment.

MCA LED controller

The MCA LED controller implements a 9-channel LED driver with independent brightness control and blink control. The MCA LED module provides the following features:

- Up to nine channels.
- Implemented on standard MCA IOs. This means an external transistor-driver may be needed, depending on the LED current sink.
- Each channel includes:
  - Brightness control (20 levels).
  - Blink control (configurable on/off periods).
  - Low-power operation (WIP) with control of the LED state (on/off/blink).
- Standard Linux LED driver with configuration through device tree and access through sysfs.

Note See the ConnectCore 8M Mini software documentation for additional information about how to configure the LED and how to assign that functionality to each specific IO.

MCA power management

The MCA plays a key role in the power management activities of the ConnectCore 8M Mini module. In cooperation with the i.MX 8M Mini processor, the MCA controls the power states of the PMIC and provides multiple wake up sources to transition between power modes. It also allocates dedicated signals to capture power events and indicate the system power state, allowing control of external power sources and indicators.

MCA power modes

The module provides four different power operating modes: ON/RUN, OFF, SUSPEND, and COIN-CELL. The following figure shows the state diagram and the events to switch between states:

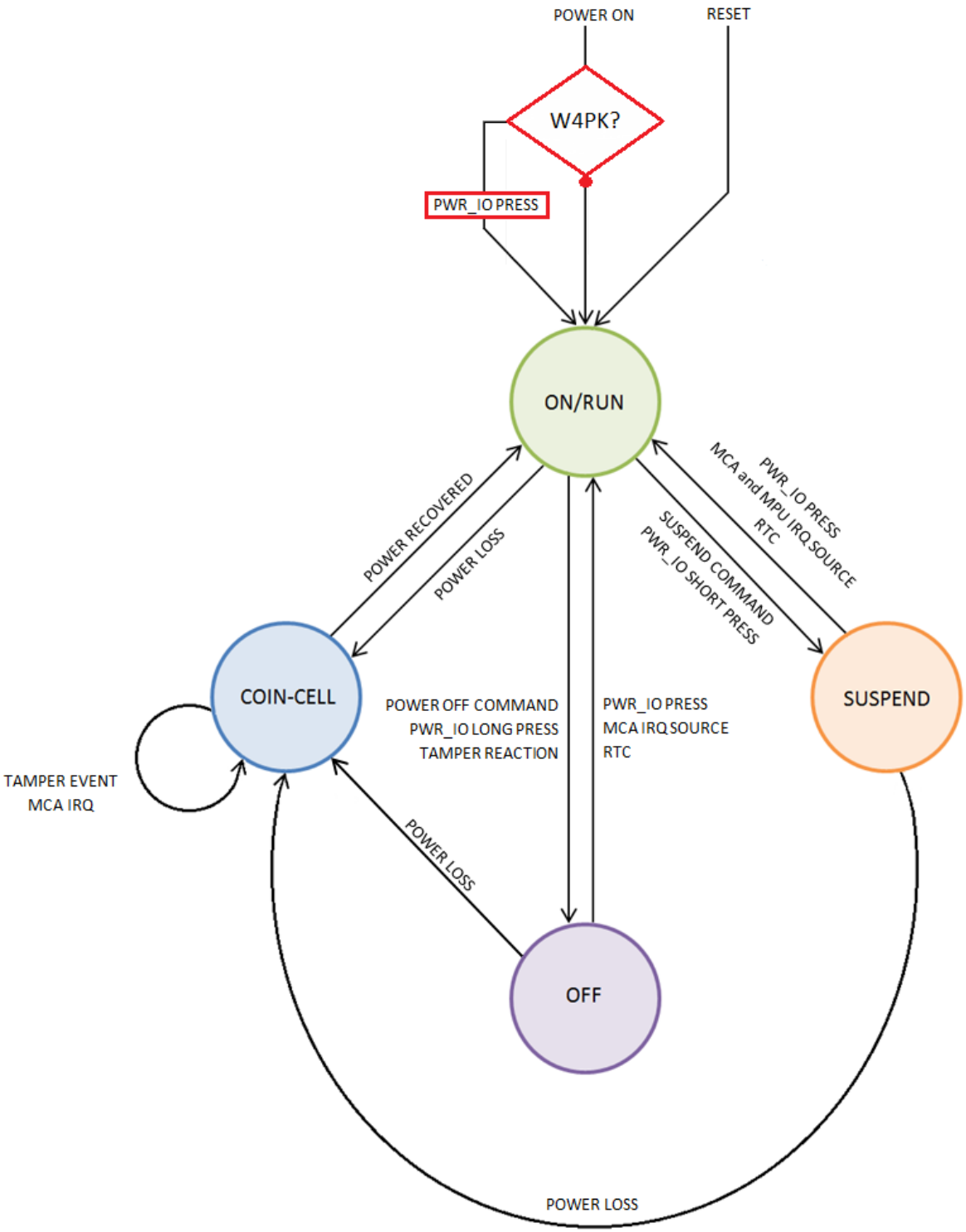

W4PK mode

You can configure boot mode using the **mca_config_tool -boot_mode** option.

If 'boot on power' (BOP) is chosen, the module will enter in ON state as soon as power is applied.

If 'wait for power key' (W4PK) is chosen, the module will wait for a PWR_IO press before entering in ON state when power is applied.

ON/RUN mode

In this mode, the PMIC is running at full power so all voltage regulators are generating the nominal voltage for this mode. The CPU reset line is de-asserted and the processor is running at normal speed, performing DVFS if the system was configured to do so. In this state, the PWR_ON line is asserted high, indicating that the module is ON.

Note that the specific state of the regulators (on/off) and the voltage in this mode are controlled by the firmware running on the i.MX 8M Mini processor. The PMIC starts with the default settings configured on the OTP area, but once the software takes control it applies the specific configuration implemented in the firmware.

SUSPEND mode

The suspend mode (also known as suspend-to-RAM mode) is the low-power mode that allows the module to preserve RAM content. When the module enters SUSPEND, the following actions take place:

- The processor goes into low power, disabling as much functionality as possible and keeping active only the peripherals configured to wake the system from SUSPEND.
- The DDR memory is set to self-refresh mode to preserve its contents while reducing power consumption.
- The PMIC goes into standby mode, configuring the regulators for this specific mode.
- The MCA goes into sleep mode, keeping active the peripherals that always run in low power modes (like the RTC) and those configured to wake up the system (such as IRQs and power IO). MCA GPIOs configured as outputs also keep their value.

OFF mode

The module enters OFF mode after a power-off event. In this mode:

- The PMIC is set to the OFF state and all the voltage regulators, except VSNVS, are switched off.
- The PWR_ON line is asserted low, indicating that the module is in OFF state.
- The MCA goes into sleep mode, keeping active the peripherals that always run in low-power modes (like the RTC) and those configured to wake up the system (such as IRQs and power IO).

COIN-CELL mode

In COIN-CELL mode, only the MCA is powered from the coin-cell battery, leaving the rest of the module power inputs switched off. In this mode, the MCA remains in sleep mode, updating the RTC and monitoring the following events:

- Tamper events that would be registered in the NVRAM memory of the MCA and would assert the tamper output if enabled.
- Power in MCA_VIN_DET, which indicates that power is reconnected to the system and it can be powered-on.

MCA power IO signal / power button

The MCA provides a signal (PWR_IO) to detect external events that trigger a transition between the different power modes described in MCA power modes. The pin has wake-up interrupt/event capabilities, it is active low, and it does not provide an internal pull-up. The pull-up resistor, typically a 100K resistor to VCC_MCA, must be added externally. This signal is ideal for connecting a power button or the output of a peripheral that controls the power state of the module and its transitions. The firmware provides a configurable debounce filter to improve noise immunity and filter rebounds on push buttons. When the PWR_IO signal is asserted low, one of the following events occurs:

- If the duration of the assertion is short (time configurable by the user) the system will trigger an interrupt that, commonly, indicates the host processor that the system must enter suspend state. When the system is in a low-power mode, the effect of a short assertion of this line is:
  - While in suspend state, it will wake the system.
  - While in OFF state, it will boot the system.
- If the low-pulse duration is long enough (again, time configurable by the user) the system will trigger the power-off interrupt to tell the host processor to start a transition to OFF state.
- If the system does not enter OFF state before a configurable guard time expires, the MCA will automatically set the OFF state unless the user explicitly cancels it by writing to the **mca_cancel_pwroff** entry in the sysfilesystem.

MCA_VIN_DET

The on-module MCA is powered from a dedicated external power rail, VCC_MCA. As recommended in the reference design (see Power supply architecture), this power supply is provided by an external 3.3 V regulator. If the system requires time to be kept when there is no power, you must use a coin-cell battery to power the MCA while it keeps the RTC up to date in low-power mode. The MCA uses the MCA_VIN_DET input to monitor the input voltage of the whole system and automatically switch to RTC mode when it is disconnected, to keep the system time and save power.

MCA_VIN_DET is a digital, not analog, line. This means that the transition time between high and low values is crucial to optimize the transitory time to RTC mode. Digi recommends using external digital logic ensure a fast transition on this line.

MCA firmware update

The i.MX 8M Mini can update the firmware of the MCA. Additional details will be provided in the MCA software documentation.

CryptoAuthentication device

The ConnectCore 8M Mini module includes an Atmel CryptoAuthentication Device. This is a highly secure cryptographic co-processor with secure hardware-based key storage. It includes the following features:

- Performs high-speed public key (PKI) algorithms (ECDSA and ECDH).NIST standard P256 elliptic curve support.
- SHA-256 hash algorithm with HMAC option.
- 256-bit key length.
- Storage for up to 16 keys.
- Two high-endurance monotonic counters.

- Guaranteed unique 72-bit serial number.
- Internal High-quality FIPS Random Number Generator (RNG).
- 10 Kb EEPROM memory.

Module pinout and IOMUX table

The ConnectCore 8M Mini System-on-Module has a mixed pad structure. It provides 474 LGA pads and 118 peripheral castellated pads. The following diagram shows the general layout:

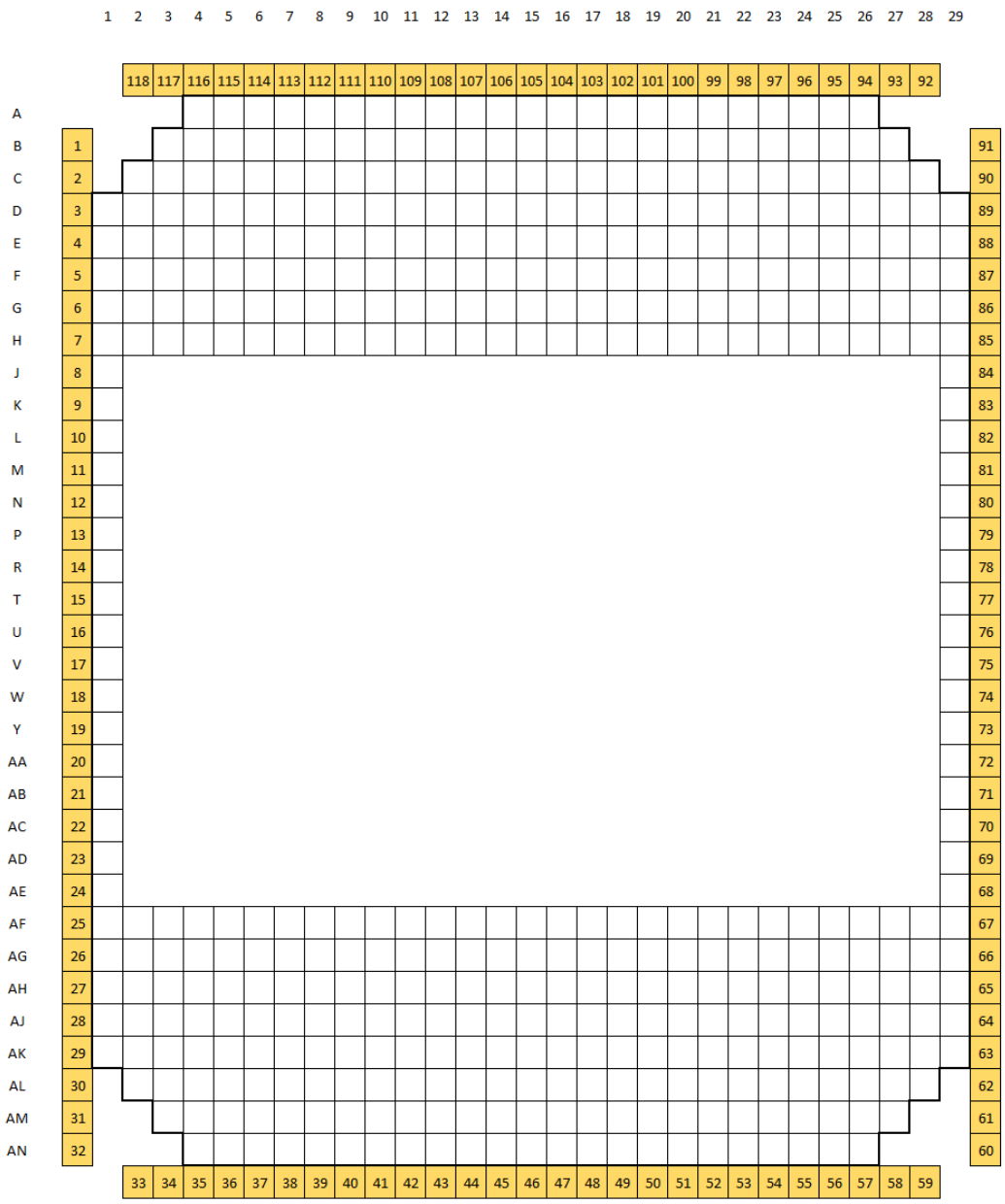

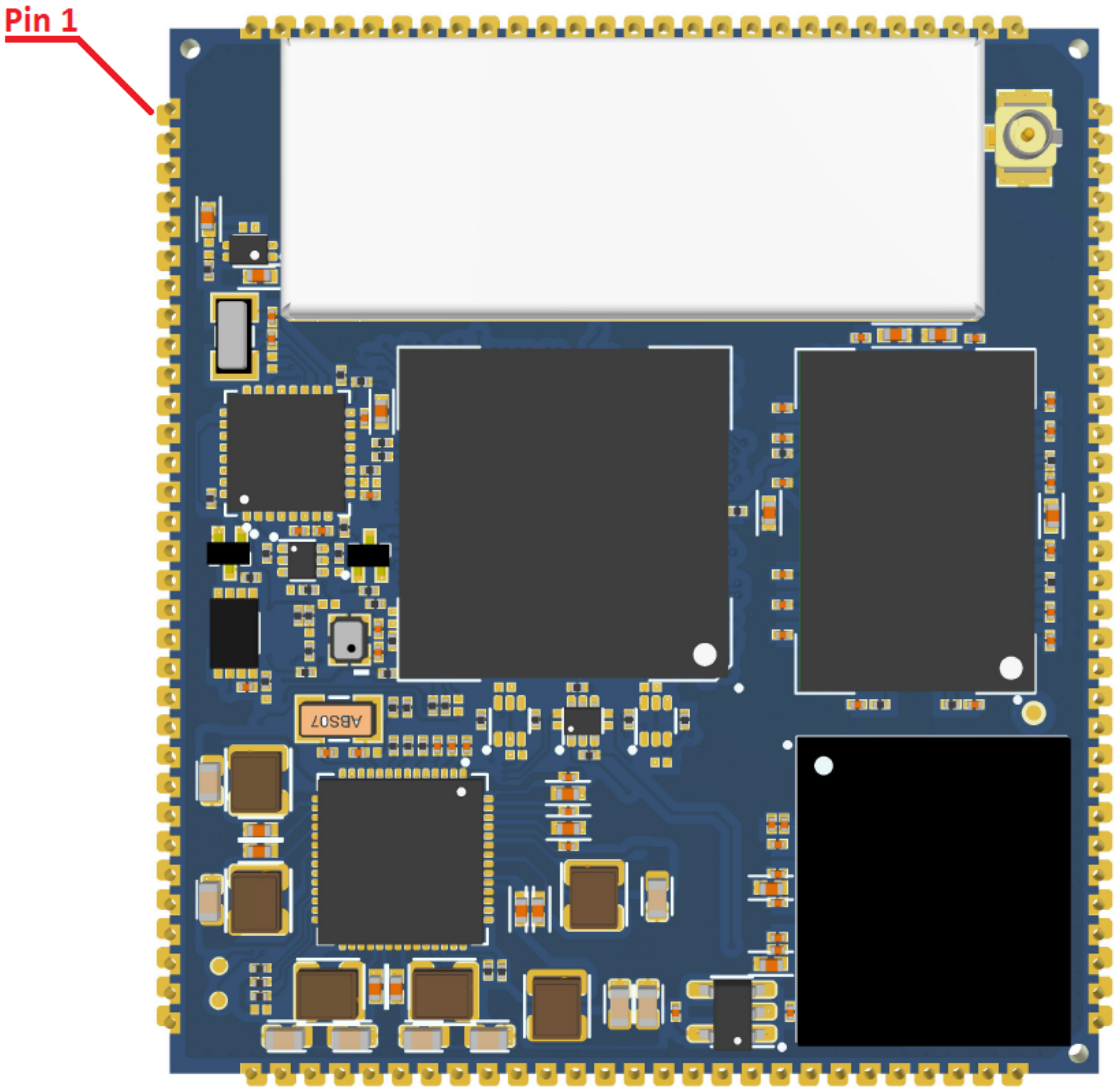
Pin 1
ABS07

External signals and pin multiplexing

The following tables list the I/O multiplexing (IOMUX) of the ConnectCore 8M Mini SOM. Most of the castellated pads are associated with (connected to) an LGA pad; this relationship is highlighted in the "Associated LGA Pad name" column.

The Digi ConnectCore Smart IOmux tool can dramatically simplify pin configuration and resolution. You can enter the list of interfaces required by your project and use the Smart IOmux graphical interface to mock up configuration options, resulting in full pin assignment and device tree snippets that match your desired functionality. See the Smart IOmux User Guide for more information and download instructions.

Note Some pads will change in the next SOM revision. See the comments column for details.

The microprocessor used on this module, like all CMOS devices, can be driven into a latch-up condition if any I/O pin is driven outside of its associated power rail. Care must be taken to:

- Never drive an I/O pin beyond its positive rail or below ground.
- Never drive an I/O pin from an external power source during the power-on or reset sequences.
- Never hot-swap the module or interrupt its ground connection to external circuitry.

Latch-up is a condition that can cause excessive current draw and result in excessive heating of the microprocessor or its power supplies. This excessive heating can permanently damage the microprocessor and/or its supporting components.

When an external supply is used on the carrier board supporting the ConnectCore 8M Mini module, this supply MUST NOT back drive i.MX 8M Mini I/Os while their power rails are not enabled. For example, this can happen when an external 3.3 V supply is available on the carrier board and this supply powers components driven by i.MX 8M Mini I/Os. In this case, Digi recommends you enable the external power supply after the internal 3.3 V is enabled, or add the necessary protection circuitry to avoid back voltage (leakage).

CAUTION! When operating at 3.3V mode, internal I/O pull up/down shall not be used due to an errata of the i.MX8M Mini/Nano processor. Use external pull up/down resistors and disable the internal pull up/down in software. For more information, refer to i.MX8M errata e50080.

Castellated pad signals and multiplexing

Castellated pad number	Associated LGA pad name	ConnectCore 8M Mini signal name	i.MX 8M Mini pin name	Multiplexing *(green value represents default functionality)*	Power group	Comments
1	E4	USDHC2_RESET_B	SD2_RESET_B	**ALT0:** USDHC2_RESET_B **ALT5:** GPIO2_IO19	VDD_USDHC2	
2	E3	GPIO3_IO23	SAI5_RXD2	**ALT0:** SAI5_RX_DATA2 **ALT1:** SAI1_TX_DATA4 **ALT2:** SAI1_TX_SYNC **ALT3:** SAI5_TX_BCLK **ALT4:** PDM_BIT_STREAM2 **ALT5:** GPIO3_IO23	3V3	
3	F3	USDHC2_WP	SD2_WP	**ALT0:** USDHC2_WP **ALT5:** GPIO2_IO20	VDD_USDHC2	
4	G2	USDHC2_CD_B	SD2_CD_B	**ALT0:** USDHC2_CD_B **ALT5:** GPIO2_IO12	VDD_USDHC2	
5	F1	USDHC2_CMD	SD2_CMD	**ALT0:** USDHC2_CMD **ALT5:** GPIO2_IO14	VDD_USDHC2	
6	G1	USDHC2_DATA0	SD2_DATA0	**ALT0:** USDHC2_DATA0 **ALT5:** GPIO2_IO15	VDD_USDHC2	
7	H1	USDHC2_DATA1	SD2_DATA1	**ALT0:** USDHC2_DATA1 **ALT5:** GPIO2_IO16	VDD_USDHC2	
8	J1	USDHC2_DATA2	SD2_DATA2	**ALT0:** USDHC2_DATA2 **ALT5:** GPIO2_IO17	VDD_USDHC2	
9	K1	USDHC2_DATA3	SD2_DATA3	**ALT0:** USDHC2_DATA3 **ALT5:** GPIO2_IO18	VDD_USDHC2	
10	L1	USDHC2_CLK	SD2_CLK	**ALT0:** USDHC2_CLK **ALT5:** GPIO2_IO13	VDD_USDHC2	

Castellated pad number	Associated LGA pad name	ConnectCore 8M Mini signal name	i.MX 8M Mini pin name	Multiplexing *(green value represents default functionality)*	Power group	Comments
11	M1	GND				
12	N1	VDD_USDHC2				
13	P1	UART3_TX	ECSPI1_MOSI	**ALT0:** ECSPI1_MOSI **ALT1:** UART3_TX **ALT5:** GPIO5_IO07	3V3	
14	R1	UART3_RX	ECSPI1_SCLK	**ALT0:** ECSPI1_SCLK **ALT1:** UART3_RX **ALT5:** GPIO5_IO06	3V3	
15	T1	GND				
16	U1	NC				
17	V1	I2C4_SCL (1V8)	I2C4_SCL	**ALT0:** I2C4_SCL **ALT1:** PWM2_OUT **ALT2:** PCIE1_CLKREQ_B **ALT5:** GPIO5_IO20	1V8	
18	W1	I2C4_SDA (1V8)	I2C4_SDA	**ALT0:** I2C4_SDA **ALT1:** PWM1_OUT **ALT5:** GPIO5_IO21	1V8	
19	Y1	GPIO5_IO05	SPDIF_EXT_CLK	**ALT0:** SPDIF1_EXT_CLK **ALT1:** PWM1_OUT **ALT5:** GPIO5_IO05	3V3	
20	AA1	GPIO1_IO00	GPIO1_IO00	**ALT0:** GPIO1_IO00 **ALT1:** CCM_ENET_PHY_REF_CLK_ROOT **ALT5:** CCM_REF_CLK_32K **ALT6:** CCM_EXT_CLK1	3V3	

Castellated pad number	Associated LGA pad name	ConnectCore 8M Mini signal name	i.MX 8M Mini pin name	Multiplexing *(green value represents default functionality)*	Power group	Comments
21	AB1	NC				
22	AC1	NC				
23	AD1	NC				
24	AE1	NC				
25	AF1	GPIO5_IO04	SPDIF_RX	**ALT0:** SPDIF1_IN **ALT1:** PWM2_OUT **ALT5:** GPIO5_IO04	3V3	
26	AG1	GPIO5_IO03	SPDIF_TX	**ALT0:** SPDIF1_OUT **ALT1:** PWM3_OUT **ALT5:** GPIO5_IO03	3V3	
27	AH1	1V8				
28	AJ1	GND				
29	AK1	3V3				
30	-	GND				
31	-	VSYS2				
32	-	VSYS2				
33	-	VSYS				
34	-	GND				
35	AN4	GPIO1_IO01	GPIO1_IO01	**ALT0:** GPIO1_IO01 **ALT1:** PWM1_OUT **ALT5:** CCM_REF_CLK_24M **ALT6:** CCM_EXT_CLK2	3V3	

Castellated pad number	Associated LGA pad name	ConnectCore 8M Mini signal name	i.MX 8M Mini pin name	Multiplexing *(green value represents default functionality)*	Power group	Comments
36	AN5	GPIO1_IO04	GPIO1_IO04	**ALT0:** GPIO1_IO04 **ALT1:** USDHC2_VSELECT **ALT5:** SDMA1_EXT_EVENT1	3V3	
37	AN6	MIPI_DSI_CLK_N	MIPI_DSI_CLK_N		VDDA_1V8	
38	AN7	MIPI_DSI_CLK_P	MIPI_DSI_CLK_P		VDDA_1V8	
39	AN8	GND				
40	AN9	MIPI_DSI_DATA0_N	MIPI_DSI_D0_N		VDDA_1V8	
41	AN10	MIPI_DSI_DATA0_P	MIPI_DSI_D0_P		VDDA_1V8	
42	AN11	GND				
43	AN12	MIPI_DSI_DATA1_N	MIPI_DSI_D1_N		VDDA_1V8	
44	AN13	MIPI_DSI_DATA1_P	MIPI_DSI_D1_P		VDDA_1V8	
45	AN14	GND				
46	AN15	MIPI_DSI_DATA2_N	MIPI_DSI_D2_N		VDDA_1V8	
47	AN16	MIPI_DSI_DATA2_P	MIPI_DSI_D2_P		VDDA_1V8	
48	AN17	GND				
49	AN18	MIPI_DSI_DATA3_N	MIPI_DSI_D3_N		VDDA_1V8	
50	AN19	MIPI_DSI_DATA3_P	MIPI_DSI_D3_P		VDDA_1V8	
51	AN20	GND				
52	AN21	MCA_IO1			VCC_MCA	
53	AN22	MCA_IO2			VCC_MCA	

Castellated pad number	Associated LGA pad name	ConnectCore 8M Mini signal name	i.MX 8M Mini pin name	Multiplexing *(green value represents default functionality)*	Power group	Comments
54	AN23	MCA_IO3			VCC_MCA	
55	AN24	SWD_CLK/PWR_IO			VCC_MCA	Input power ON/OFF line of the module (active low).
56	AN25	SYS_RESET			VCC_MCA	Input reset line of the module (active low).
57	AN26	SWD_DIO/MCA_IO0			VCC_MCA	
58	AM27	MCA_VIN_DET				
59	-	VCC_MCA				
60	-	GND				
61	AL27	MCA_IO4			VCC_MCA	
62	AL28	NC				
63	AK29	NC				
64	AJ29	NC				
65	AH29	NC				
66	AG29	MCA_IO9			VCC_MCA	
67	AF29	MCA_IO10			VCC_MCA	
68	AE29	BOOT_MODE0	BOOT_MODE0		1V8	

Castellated pad number	Associated LGA pad name	ConnectCore 8M Mini signal name	i.MX 8M Mini pin name	Multiplexing *(green value represents default functionality)*	Power group	Comments
69	AD29	BOOT_MODE1	BOOT_MODE1		1V8	
70	AC29	NC				
71	AB29	NC				
72	AA29	1V8				
73	Y29	GND				
74	W29	UART1_TX	SAI2_RXFS	**ALT0:** SAI2_RX_SYNC **ALT1:** SAI5_TX_SYNC **ALT2:** SAI5_TX_DATA1 **ALT3:** SAI2_RX_DATA1 **ALT4:** UART1_TX **ALT5:** GPIO4_IO21	3V3	
75	V29	UART1_RX	SAI2_RXC	**ALT0:** SAI2_RX_BCLK **ALT1:** SAI5_TX_BCLK **ALT4:** UART1_RX **ALT5:** GPIO4_IO22	3V3	
76	U29	UART4_RXD	UART4_RXD	**ALT0:** UART4_RX **ALT1:** UART2_CTS_B **ALT2:** PCIE1_CLKREQ_B **ALT5:** GPIO5_IO28	VDD_UART	This line is not available in the castellated pads because VDD_UART is only available in LGA pads.

Castellated pad number	Associated LGA pad name	ConnectCore 8M Mini signal name	i.MX 8M Mini pin name	Multiplexing *(green value represents default functionality)*	Power group	Comments
77	T29	UART4_TXD	UART4_TXD	**ALT0:** UART4_TX **ALT1:** UART2_RTS_B **ALT5:** GPIO5_IO29	VDD_UART	This line is not available in the castellated pads because VDD_UART is only available in LGA pads.
78	R29	NC				
79	P29	NC				
80	N29	UART3_RTS_B	ECSPI1_SS0	**ALT0:** ECSPI1_SS0 **ALT1:** UART3_RTS_B **ALT5:** GPIO5_IO09	3V3	
81	M29	UART3_CTS_B	ECSPI1_MISO	**ALT0:** ECSPI1_MISO **ALT1:** UART3_CTS_B **ALT5:** GPIO5_IO08	3V3	
82	L29	NC				
83	K29	GPIO3_IO01	NAND_CE0_B	**ALT0:** NAND_CE0_B **ALT1:** QSPI_A_SS0_B **ALT5:** GPIO3_IO01	1V8	
84	J29	NC				
85	H29	GND				

Castellated pad number	Associated LGA pad name	ConnectCore 8M Mini signal name	i.MX 8M Mini pin name	Multiplexing *(green value represents default functionality)*	Power group	Comments
86	G29	GPIO5_IO02	SAI3_MCLK	**ALT0:** SAI3_MCLK **ALT1:** PWM4_OUT **ALT2:** SAI5_MCLK **ALT5:** GPIO5_IO02	3V3	
87	F29	GPIO5_IO01	SAI3_TXD	**ALT0:** SAI3_TX_DATA0 **ALT1:** GPT1_COMPARE3 **ALT2:** SAI5_RX_DATA3 **ALT5:** GPIO5_IO01	3V3	
88	E29	I2C2_SDA (1V8)	I2C2_SDA	**ALT0:** I2C2_SDA **ALT1:** ENET1_1588_EVENT1_OUT **ALT2:** USDHC3_WP **ALT5:** GPIO5_IO17	1V8	
89	F28	I2C2_SCL (1V8)	I2C2_SCL	**ALT0:** I2C2_SCL **ALT1:** ENET1_1588_EVENT1_IN **ALT2:** USDHC3_CD_B **ALT5:** GPIO5_IO16	1V8	
90	E28	GPIO4_IO28	SAI3_RXFS	**ALT0:** SAI3_RX_SYNC **ALT1:** GPT1_CAPTURE1 **ALT2:** SAI5_RX_SYNC **ALT3:** SAI3_RX_DATA1 **ALT5:** GPIO4_IO28	3V3	
91	E27	GPIO3_IO24	SAI5_RXD3	**ALT0:** SAI5_RX_DATA3 **ALT1:** SAI1_TX_DATA5 **ALT2:** SAI1_TX_SYNC **ALT3:** SAI5_TX_DATA0 **ALT4:** PDM_BIT_STREAM3 **ALT5:** GPIO3_IO24	3V3	

Castellated pad number	Associated LGA pad name	ConnectCore 8M Mini signal name	i.MX 8M Mini pin name	Multiplexing *(green value represents default functionality)*	Power group	Comments
92	C24	GPIO3_IO25	SAI5_MCLK	**ALT0:** SAI5_MCLK **ALT1:** SAI1_TX_BCLK **ALT5:** GPIO3_IO25	3V3	
93	B24	GPIO4_IO27	SAI2_MCLK	**ALT0:** SAI2_MCLK **ALT1:** SAI5_MCLK **ALT5:** GPIO4_IO27	3V3	
94	-	GND				
95	-	VDD_ENET				
96	A24	ENET0_RGMII_TXC	ENET_TXC	**ALT0:** ENET1_RGMII_TXC **ALT1:** ENET1_TX_ER **ALT5:** GPIO1_IO23	VDD_ENET	
97	A23	ENET0_RGMII_TX_CTL	ENET_TX_CTL	**ALT0:** ENET1_RGMII_TX_CTL **ALT5:** GPIO1_IO22	VDD_ENET	
98	A22	ENET0_RGMII_TXD0	ENET_TD0	**ALT0:** ENET1_RGMII_TD0 **ALT5:** GPIO1_IO21	VDD_ENET	
99	A21	ENET0_RGMII_TXD1	ENET_TD1	**ALT0:** ENET1_RGMII_TD1 **ALT5:** GPIO1_IO20	VDD_ENET	
100	A20	ENET0_RGMII_TXD2	ENET_TD2	**ALT0:** ENET1_RGMII_TD2 **ALT1:** INPUT=ENET1_TX_CLK/OUTPUT=CCM_ENET_REF_CLK_ROOT **ALT5:** GPIO1_IO19	VDD_ENET	
101	A19	ENET0_RGMII_TXD3	ENET_TD3	**ALT0:** ENET1_RGMII_TD3 **ALT5:** GPIO1_IO18	VDD_ENET	

Castellated pad number	Associated LGA pad name	ConnectCore 8M Mini signal name	i.MX 8M Mini pin name	Multiplexing *(green value represents default functionality)*	Power group	Comments
102	A18	ENET0_RGMII_RXC	ENET_RXC	**ALT0:** ENET1_RGMII_RXC **ALT1:** ENET1_RX_ER **ALT5:** GPIO1_IO25	VDD_ENET	
103	A17	ENET0_RGMII_RX_CTL	ENET_RX_CTL	**ALT0:** ENET1_RGMII_RX_CTL **ALT5:** GPIO1_IO24	VDD_ENET	
104	A16	ENET0_RGMII_RXD0	ENET_RD0	**ALT0:** ENET1_RGMII_RD0 **ALT5:** GPIO1_IO26	VDD_ENET	
105	A15	ENET0_RGMII_RXD1	ENET_RD1	**ALT0:** ENET1_RGMII_RD1 **ALT5:** GPIO1_IO27	VDD_ENET	
106	A14	ENET0_RGMII_RXD2	ENET_RD2	**ALT0:** ENET1_RGMII_RD2 **ALT5:** GPIO1_IO28	VDD_ENET	
107	A13	ENET0_RGMII_RXD3	ENET_RD3	**ALT0:** ENET1_RGMII_RD3 **ALT5:** GPIO1_IO29	VDD_ENET	
108	A12	GPIO3_IO07 (1V8)	NAND_DATA01	**ALT0:** NAND_DATA01 **ALT1:** QSPI_A_DATA1 **ALT5:** GPIO3_IO07	1V8	
109	A11	ENET0_MDIO	ENET_MDIO	**ALT0:** ENET1_MDIO **ALT5:** GPIO1_IO17	VDD_ENET	
110	A10	ENET0_MDC	ENET_MDC	**ALT0:** ENET1_MDC **ALT5:** GPIO1_IO16	VDD_ENET	
111	A9	USB_OTG2_P	USB2_DP		3V3	
112	A8	USB_OTG2_N	USB2_DN		3V3	
113	A7	USB_OTG1_P	USB1_DP		3V3	
114	A6	USB_OTG1_N	USB1_DN		3V3	

Castellated pad number	Associated LGA pad name	ConnectCore 8M Mini signal name	i.MX 8M Mini pin name	Multiplexing *(green value represents default functionality)*	Power group	Comments
115	-	GND				
116	B6	USB_OTG1_VBUS	USB1_VBUS			
117	D4	GND				
118	C6	USB_OTG1_ID	USB1_ID		VDDA_1V8	

LGA signals and multiplexing

LGA pad name	ConnectCore 8M Mini signal name	i.MX 8M Mini pad name	Multiplexing	Power group	Comments
A4	GND				
A5	GND				
A6	USB_OTG1_N	USB1_DN		3V3	
A7	USB_OTG1_P	USB1_DP		3V3	
A8	USB_OTG2_N	USB2_DN		3V3	
A9	USB_OTG2_P	USB2_DP		3V3	
A10	ENET0_MDC	ENET_MDC	**ALT0:** ENET1_MDC **ALT5:** GPIO1_IO16	VDD_ENET	
A11	ENET0_MDIO	ENET_MDIO	**ALT0:** ENET1_MDIO **ALT5:** GPIO1_IO17	VDD_ENET	
A12	GPIO3_IO07 (1V8)	NAND_DATA01	**ALT0:** NAND_DATA01 **ALT1:** QSPI_A_DATA1 **ALT5:** GPIO3_IO07	1V8	

LGA pad name	ConnectCore 8M Mini signal name	i.MX 8M Mini pad name	Multiplexing	Power group	Comments
A13	ENET0_RGMII_RXD3	ENET_RD3	**ALT0:** ENET1_RGMII_RD3 **ALT5:** GPIO1_IO29	VDD_ENET	
A14	ENET0_RGMII_RXD2	ENET_RD2	**ALT0:** ENET1_RGMII_RD2 **ALT5:** GPIO1_IO28	VDD_ENET	
A15	ENET0_RGMII_RXD1	ENET_RD1	**ALT0:** ENET1_RGMII_RD1 **ALT5:** GPIO1_IO27	VDD_ENET	
A16	ENET0_RGMII_RXD0	ENET_RD0	**ALT0:** ENET1_RGMII_RD0 **ALT5:** GPIO1_IO26	VDD_ENET	
A17	ENET0_RGMII_RX_CTL	ENET_RX_CTL	**ALT0:** ENET1_RGMII_RX_CTL **ALT5:** GPIO1_IO24	VDD_ENET	
A18	ENET0_RGMII_RXC	ENET_RXC	**ALT0:** ENET1_RGMII_RXC **ALT1:** ENET1_RX_ER **ALT5:** GPIO1_IO25	VDD_ENET	
A19	ENET0_RGMII_TXD3	ENET_TD3	**ALT0:** ENET1_RGMII_TD3 **ALT5:** GPIO1_IO18	VDD_ENET	
A20	ENET0_RGMII_TXD2	ENET_TD2	**ALT0:** ENET1_RGMII_TD2 **ALT1:** INPUT=ENET1_TX_CLK/OUTPUT=CCM_ENET_REF_CLK_ROOT **ALT5:** GPIO1_IO19	VDD_ENET	
A21	ENET0_RGMII_TXD1	ENET_TD1	**ALT0:** ENET1_RGMII_TD1 **ALT5:** GPIO1_IO20	VDD_ENET	
A22	ENET0_RGMII_TXD0	ENET_TD0	**ALT0:** ENET1_RGMII_TD0 **ALT5:** GPIO1_IO21	VDD_ENET	
A23	ENET0_RGMII_TX_CTL	ENET_TX_CTL	**ALT0:** ENET1_RGMII_TX_CTL **ALT5:** GPIO1_IO22	VDD_ENET	

LGA pad name	ConnectCore 8M Mini signal name	i.MX 8M Mini pad name	Multiplexing	Power group	Comments
A24	ENET0_RGMII_TXC	ENET_TXC	**ALT0:** ENET1_RGMII_TXC **ALT1:** ENET1_TX_ER **ALT5:** GPIO1_IO23	VDD_ENET	
A25	GND				
A26	NC				
B3	GND				
B4	GND				
B5	GND				
B6	USB_OTG1_VBUS	USB1_VBUS			
B7	NC				
B8	GND				
B9	NC				
B10	NC				
B11	GND				
B12	NC				
B13	NC				
B14	GND				
B15	GND				
B16	WLAN_RF_KILL#			3V3_RF	
B17	BT_RF_KILL#			3V3_RF	

LGA pad name	ConnectCore 8M Mini signal name	i.MX 8M Mini pad name	Multiplexing	Power group	Comments
B18	GND				
B19	SAI1_RXD3	SAI1_RXD3	**ALT0:** SAI1_RX_DATA3 **ALT1:** SAI5_RX_DATA3 **ALT3:** PDM_BIT_STREAM3 **ALT4:** CORESIGHT_TRACE3 **ALT5:** GPIO4_IO05 **ALT6:** SRC_BOOT_CFG3		
B20	SAI1_RXD4	SAI1_RXD4	**ALT0:** SAI1_RX_DATA4 **ALT1:** SAI6_TX_BCLK **ALT2:** SAI6_RX_BCLK **ALT4:** CORESIGHT_TRACE4 **ALT5:** GPIO4_IO06 **ALT6:** SRC_BOOT_CFG4		
B21	SAI1_RXD5	SAI1_RXD5	**ALT0:** SAI1_RX_DATA5 **ALT1:** SAI6_TX_DATA0 **ALT2:** SAI6_RX_DATA0 **ALT3:** SAI1_RX_SYNC **ALT4:** CORESIGHT_TRACE5 **ALT5:** GPIO4_IO07 **ALT6:** SRC_BOOT_CFG5		
B22	SAI1_RXD6	SAI1_RXD6	**ALT0:** SAI1_RX_DATA6 **ALT1:** SAI6_TX_SYNC **ALT2:** SAI6_RX_SYNC **ALT4:** CORESIGHT_TRACE6 **ALT5:** GPIO4_IO08 **ALT6:** SRC_BOOT_CFG6		
B23	NC				

LGA pad name	ConnectCore 8M Mini signal name	i.MX 8M Mini pad name	Multiplexing	Power group	Comments
B24	GPIO4_IO27	SAI2_MCLK	**ALT0:** SAI2_MCLK **ALT1:** SAI5_MCLK **ALT5:** GPIO4_IO27	3V3	
B25	GND				
B26	GND				
B27	GND				
C2	GND				
C3	NC				
C4	GND				
C5	GND				
C6	USB_OTG1_ID	USB1_ID		VDDA_1V8	
C7	GPIO1_IO14	GPIO1_IO14	**ALT0:** GPIO1_IO14 **ALT1:** USB2_OTG_PWR **ALT4:** USDHC3_CD_B **ALT5:** PWM3_OUT **ALT6:** CCM_CLKO1	3V3	
C8	GPIO1_IO12	GPIO1_IO12	**ALT0:** GPIO1_IO12 **ALT1:** USB1_OTG_PWR **ALT5:** SDMA2_EXT_EVENT1	3V3	
C9	GPIO1_IO13	GPIO1_IO13	**ALT0:** GPIO1_IO13 **ALT1:** USB1_OTG_OC **ALT5:** PWM2_OUT	3V3	
C10	USB_OTG2_ID	USB2_ID		VDDA_1V8	

LGA pad name	ConnectCore 8M Mini signal name	i.MX 8M Mini pad name	Multiplexing	Power group	Comments
C11	GPIO1_IO15	GPIO1_IO15	**ALT0:** GPIO1_IO15 **ALT1:** USB2_OTG_OC **ALT4:** USDHC3_WP **ALT5:** PWM4_OUT **ALT6:** CCM_CLKO2	3V3	
C12	GND				
C13	GND				
C14	GND				
C15	GND				
C16	GND				
C17	SPI3_CS0	UART2_TXD	**ALT0:** UART2_TX **ALT1:** ECSPI3_SS0 **ALT5:** GPIO5_IO25	VDD_UART	
C18	SPI3_SDI	UART2_RXD	**ALT0:** UART2_RX **ALT1:** ECSPI3_MISO **ALT5:** GPIO5_IO24	VDD_UART	
C19	SAI2_TXFS	SAI2_TXFS	**ALT0:** SAI2_TX_SYNC **ALT1:** SAI5_TX_DATA1 **ALT3:** SAI2_TX_DATA1 **ALT4:** UART1_CTS_B **ALT5:** GPIO4_IO24	3V3	

LGA pad name	ConnectCore 8M Mini signal name	i.MX 8M Mini pad name	Multiplexing	Power group	Comments
C20	SAI1_RXD7	SAI1_RXD7	**ALT0:** SAI1_RX_DATA7 **ALT1:** SAI6_MCLK **ALT2:** SAI1_TX_SNC **ALT3:** SAI1_TX_DATA4 **ALT4:** CORESIGHT_TRACE7 **ALT5:** GPIO4_IO09 **ALT6:** SRC_BOOT_CFG7		
C21	NC				
C22	NC				
C23	NC				
C24	GPIO3_IO25	SAI5_MCLK	**ALT0:** SAI5_MCLK **ALT1:** SAI1_TX_BCLK **ALT5:** GPIO3_IO25	3V3	
C25	GND				
C26	GND				
C27	RF_ANT1				Internal antenna pad. Do not use unless otherwise noted.
C28	GND				
D1	NC				
D2	GND				

LGA pad name	ConnectCore 8M Mini signal name	i.MX 8M Mini pad name	Multiplexing	Power group	Comments
D3	GND				
D4	GND				
D5	WLAN_SD1_D3	SD1_DATA3	**ALT0:** USDHC1_DATA3 **ALT5:** GPIO2_IO05	1V8	See [1] at bottom of table.
D6	WLAN_SD1_D2	SD1_DATA2	**ALT0:** USDHC1_DATA2 **ALT5:** GPIO2_IO04	1V8	See [1] at bottom of table.
D7	WLAN_SD1_D7	SD1_DATA7	**ALT0:** USDHC1_DATA7 **ALT5:** GPIO2_IO09	1V8	See [1] at bottom of table.
D8	WLAN_SD1_D1	SD1_DATA1	**ALT0:** USDHC1_DATA1 **ALT5:** GPIO2_IO03	1V8	See [1] at bottom of table.
D9	WLAN_SD1_D0	SD1_DATA0	**ALT0:** USDHC1_DATA0 **ALT5:** GPIO2_IO02	1V8	See [1] at bottom of table.
D10	WLAN_SD1_D6	SD1_DATA6	**ALT0:** USDHC1_DATA6 **ALT5:** GPIO2_IO08	1V8	See [1] at bottom of table.
D11	WLAN_SD1_CMD	SD1_CMD	**ALT0:** USDHC1_CMD **ALT5:** GPIO2_IO01	1V8	See [1] at bottom of table.
D12	WLAN_SD1_CLK	SD1_CLK	**ALT0:** USDHC1_CLK **ALT5:** GPIO2_IO00	1V8	See [1] at bottom of table.
D13	WLAN_SD1_D5	SD1_DATA5	**ALT0:** USDHC1_DATA5 **ALT5:** GPIO2_IO07	1V8	See [1] at bottom of table.
D14	WLAN_SD1_D4	SD1_DATA4	**ALT0:** USDHC1_DATA4 **ALT5:** GPIO2_IO06	1V8	See [1] at bottom of table.
D15	VDD_ENET				

LGA pad name	ConnectCore 8M Mini signal name	i.MX 8M Mini pad name	Multiplexing	Power group	Comments
D16	GND				
D17	SPI2_SCK	ECSPI2_SCLK	**ALT0:** ECSPI2_SCLK **ALT1:** UART4_RX **ALT5:** GPIO5_IO10	3V3	
D18	SPI3_SDO	UART1_TXD	**ALT0:** UART1_TX **ALT1:** ECSPI3_MOSI **ALT5:** GPIO5_IO23	VDD_UART	
D19	SAI5_RXD	SAI5_RXD0	**ALT0:** SAI5_RX_DATA0 **ALT1:** SAI1_TX_DATA2 **ALT4:** PDM_BIT_STREAM0 **ALT5:** GPIO3_IO21	3V3	
D20	NC				
D21	NC				
D22	NC				
D23	NC				
D24	GND				
D25	GPIO3_IO09 (1V8)	NAND_DATA03	**ALT0:** NAND_DATA03 **ALT1:** QSPI_A_DATA3 **ALT2:** USDHC3_WP **ALT5:** GPIO3_IO09	1V8	
D26	GND				
D27	GND				
D28	GND				

LGA pad name	ConnectCore 8M Mini signal name	i.MX 8M Mini pad name	Multiplexing	Power group	Comments
D29	GND				
E1	GND				
E2	GND				
E3	GPIO3_IO23	SAI5_RXD2	**ALT0:** SAI5_RX_DATA2 **ALT1:** SAI1_TX_DATA4 **ALT2:** SAI1_TX_SYNC **ALT3:** SAI5_TX_BCLK **ALT4:** PDM_BIT_STREAM2 **ALT5:** GPIO3_IO23	3V3	
E4	USDHC2_RESET_B	SD2_RESET_B	**ALT0:** USDHC2_RESET_B **ALT5:** GPIO2_IO19	VDD_USDHC2	
E5	1V8				
E6	GND				
E7	USB_OTG2_VBUS	USB2_VBUS			This pad is internally disconnected. USB2_VBUS is internally tied to VDD_3V3.
E8	GND				
E9	GPS_COEX			3V3_RF	
E10	LTE_PRI			3V3_RF	
E11	LTE_SYNC			3V3_RF	

LGA pad name	ConnectCore 8M Mini signal name	i.MX 8M Mini pad name	Multiplexing	Power group	Comments
E12	BT_UART1_RX	SAI3_TXFS	**ALT0:** SAI3_TX_SYNC **ALT1:** GPT1_CAPTURE2 **ALT2:** SAI5_RX_DATA1 **ALT3:** SAI3_TX_DATA1 **ALT4:** UART2_RX **ALT5:** GPIO4_IO31	3V3	Internal UART line used by the Bluetooth. This signal is externally available only in non-wireless variants.
E13	BT_UART1_TX	SAI3_TXC	**ALT0:** SAI3_TX_BCLK **ALT1:** GPT1_COMPARE2 **ALT2:** SAI5_RX_DATA2 **ALT4:** UART2_TX **ALT5:** GPIO5_IO00	3V3	
E14	NC				
E15	GND				
E16	VDD_UART				
E17	SPI3_SCLK	UART1_RXD	**ALT0:** UART1_RX **ALT1:** ECSPI3_SCLK **ALT5:** GPIO5_IO22	VDD_UART	
E18	SPI2_SDO	ECSPI2_MOSI	**ALT0:** ECSPI2_MOSI **ALT1:** UART4_TX **ALT5:** GPIO5_IO11	3V3	
E19	SPI2_CS0	ECSPI2_SS0	**ALT0:** ECSPI2_SS0 **ALT1:** UART4_RTS_B **ALT5:** GPIO5_IO13	3V3	
E20	SAI2_TXD	SAI2_TXD0	**ALT0:** SAI2_TX_DATA0 **ALT1:** SAI5_TX_DATA3 **ALT5:** GPIO4_IO26	3V3	

LGA pad name	ConnectCore 8M Mini signal name	i.MX 8M Mini pad name	Multiplexing	Power group	Comments
E21	SAI2_RXD	SAI2_RXD0	**ALT0:** SAI2_RX_DATA0 **ALT1:** SAI5_TX_DATA0 **ALT4:** UART1_RTS_B **ALT5:** GPIO4_IO23	3V3	
E22	SPI2_SDI	ECSPI2_MISO	**ALT0:** ECSPI2_MISO **ALT1:** UART4_CTS_B **ALT5:** GPIO5_IO12	3V3	
E23	SAI2_TXC	SAI2_TXC	**ALT0:** SAI2_TX_BCLK **ALT1:** SAI5_TX_DATA2 **ALT5:** GPIO4_IO25	3V3	
E24	SAI5_RXC	SAI5_RXC	**ALT0:** SAI5_RX_BCLK **ALT1:** SAI1_TX_DATA1 **ALT4:** PDM_CLK **ALT5:** GPIO3_IO20	3V3	
E25	SAI5_RXFS	SAI5_RXFS	**ALT0:** SAI5_RX_SYNC **ALT1:** SAI1_TX_DATA0 **ALT5:** GPIO3_IO19	3V3	
E26	GPIO1_IO06	GPIO1_IO06	**ALT0:** GPIO1_IO06 **ALT1:** ENET1_MDC **ALT5:** USDHC1_CD_B **ALT6:** CCM_EXT_CLK3	3V3	
E27	GPIO3_IO24	SAI5_RXD3	**ALT0:** SAI5_RX_DATA3 **ALT1:** SAI1_TX_DATA5 **ALT2:** SAI1_TX_SYNC **ALT3:** SAI5_TX_DATA0 **ALT4:** PDM_BIT_STREAM3 **ALT5:** GPIO3_IO24	3V3	

LGA pad name	ConnectCore 8M Mini signal name	i.MX 8M Mini pad name	Multiplexing	Power group	Comments
E28	GPIO4_IO28	SAI3_RXFS	**ALT0:** SAI3_RX_SYNC **ALT1:** GPT1_CAPTURE1 **ALT2:** SAI5_RX_SYNC **ALT3:** SAI3_RX_DATA1 **ALT5:** GPIO4_IO28	3V3	
E29	I2C2_SDA (1V8)	I2C2_SDA	**ALT0:** I2C2_SDA **ALT1:** ENET1_1588_EVENT1_OUT **ALT2:** USDHC3_WP **ALT5:** GPIO5_IO17	1V8	
F1	USDHC2_CMD	SD2_CMD	**ALT0:** USDHC2_CMD **ALT5:** GPIO2_IO14	VDD_USDHC2	
F2	NC				
F3	USDHC2_WP	SD2_WP	**ALT0:** USDHC2_WP **ALT5:** GPIO2_IO20	VDD_USDHC2	
F4	NC				
F5	NC				
F6	NC				
F7	NC				
F8	NC				
F9	NC				

LGA pad name	ConnectCore 8M Mini signal name	i.MX 8M Mini pad name	Multiplexing	Power group	Comments
F10	3V3_RF_EN	SD1_DATA4	**ALT0:** USDHC1_DATA4 **ALT5:** GPIO2_IO06	1V8	In Wireless variants of the SOM this is a reserved output line. Do not drive this signal externally.
F11	BT_UART1_RTS#	SAI3_RXD	**ALT0:** SAI3_RX_DATA0 **ALT1:** GPT1_COMPARE1 **ALT2:** SAI5_RX_DATA0 **ALT4:** UART2_RTS_B **ALT5:** GPIO4_IO30	3V3	Internal UART line used by the Bluetooth. This signal is externally available only in non-wireless variants.
F12	BT_UART1_CTS#	SAI3_RXC	**ALT0:** SAI3_RX_BCLK **ALT1:** GPT1_CLK **ALT2:** SAI5_RX_BCLK **ALT4:**UART2_CTS_B **ALT5:** GPIO4_IO29	3V3	
F13	PCM_OUT			3V3_RF	
F14	PCM_SYNC			3V3_RF	
F15	GND				
F16	GND				
F17	3V3_RF				
F18	3V3_RF				

LGA pad name	ConnectCore 8M Mini signal name	i.MX 8M Mini pad name	Multiplexing	Power group	Comments
F19	NC				
F20	MUX_3V3_1V8				
F21	GND				
F22	GND				
F23	QOW			3V3_RF	
F24	WLAN_LED			3V3_RF	
F25	BT_LED			3V3_RF	
F26	BT_EN	SD1_DATA6	**ALT0:** USDHC1_DATA6 **ALT5:** GPIO2_IO08	1V8	Internally tied to pad D10 (WLAN_SD1_D6).
F27	WL_EN	SD1_DATA7	**ALT0:** USDHC1_DATA7 **ALT5:** GPIO2_IO09	1V8	Internally tied to pad D7 (WLAN_SD1_D7).
F28	I2C2_SCL (1V8)	I2C2_SCL	**ALT0:** I2C2_SCL **ALT1:** ENET1_1588_EVENT1_IN **ALT2:** USDHC3_CD_B **ALT5:** GPIO5_IO16	1V8	
F29	GPIO5_IO01	SAI3_TXD	**ALT0:** SAI3_TX_DATA0 **ALT1:** GPT1_COMPARE3 **ALT2:** SAI5_RX_DATA3 **ALT5:** GPIO5_IO01	3V3	
G1	USDHC2_DATA0	SD2_DATA0	**ALT0:** USDHC2_DATA0 **ALT5:** GPIO2_IO15	VDD_USDHC2	

LGA pad name	ConnectCore 8M Mini signal name	i.MX 8M Mini pad name	Multiplexing	Power group	Comments
G2	USDHC2_CD_B	SD2_CD_B	**ALT0:** USDHC2_CD_B **ALT5:** GPIO2_IO12	VDD_USDHC2	
G3	PCIE_REFCLK_N	PCIE_CLK_N		VDDA_1V8	
G4	PCIE_REFCLK_P	PCIE_CLK_P		VDDA_1V8	
G5	GND				
G6	PCIE_RX0_N	PCIE_RXN_N		VDDA_1V8	
G7	PCIE_RX0_P	PCIE_RXN_P		VDDA_1V8	
G8	GND				
G9	PCIE_TX0_N	PCIE_TXN_N		VDDA_1V8	
G10	PCIE_TX0_P	PCIE_TXN_P		VDDA_1V8	
G11	GND				
G12	BT_WAKEUP_SLAVE			3V3_RF	
G13	PCM_CLK			3V3_RF	
G14	PCM_IN			3V3_RF	
G15	LTE_ACTIVE			3V3_RF	
G16	GND			3V3_RF	
G17	BT_WAKEUP_HOST			3V3_RF	
G18	WLAN_SDIO_INT_L	SD1_STROBE	**ALT0:** USDHC1_STROBE **ALT5:** GPIO2_IO11	1V8	
G19	GND				

LGA pad name	ConnectCore 8M Mini signal name	i.MX 8M Mini pad name	Multiplexing	Power group	Comments
G20	NC				
G21	NC				
G22	GND				
G23	NC				
G24	NC				
G25	GND				
G26	GND				
G27	GND				
G28	GND				
G29	GPIO5_IO02	SAI3_MCLK	**ALT0:** SAI3_MCLK **ALT1:** PWM4_OUT **ALT2:** SAI5_MCLK **ALT5:** GPIO5_IO02	3V3	
H1	USDHC2_DATA1	SD2_DATA1	**ALT0:** USDHC2_DATA1 **ALT5:** GPIO2_IO16	VDD_USDHC2	
H2	GND				
H3	GND				
H4	GND				
H5	GND				
H6	GND				
H7	GND				

LGA pad name	ConnectCore 8M Mini signal name	i.MX 8M Mini pad name	Multiplexing	Power group	Comments
H8	GND				
H9	GND				
H10	GND				
H11	GND				
H12	GND				
H13	GND				
H14	GND				
H15	GND				
H16	GND				
H17	GND				
H18	GND				
H19	GND				
H20	GND				
H21	GND				
H22	GND				
H23	GND				
H24	GND				
H25	GND				
H26	GND				

LGA pad name	ConnectCore 8M Mini signal name	i.MX 8M Mini pad name	Multiplexing	Power group	Comments
H27	GND				
H28	GND				
H29	GND				
J1	USDHC2_DATA2	SD2_DATA2	**ALT0:** USDHC2_DATA2 **ALT5:** GPIO2_IO17	VDD_USDHC2	
J29	NC				
K1	USDHC2_DATA3	SD2_DATA3	**ALT0:** USDHC2_DATA3 **ALT5:** GPIO2_IO18	VDD_USDHC2	
K29	GPIO3_IO01	NAND_CE0_B	**ALT0:** NAND_CE0_B **ALT1:** QSPI_A_SS0_B **ALT5:** GPIO3_IO01	1V8	
L1	USDHC2_CLK	SD2_CLK	**ALT0:** USDHC2_CLK **ALT5:** GPIO2_IO13	VDD_USDHC2	
L29	NC				
M1	GND				
M29	UART3_CTS_B	ECSPI1_MISO	**ALT0:** ECSPI1_MISO **ALT1:** UART3_CTS_B **ALT5:** GPIO5_IO08	3V3	
N1	VDD_USDHC2				
N29	UART3_RTS_B	ECSPI1_SS0	**ALT0:** ECSPI1_SS0 **ALT1:** UART3_RTS_B **ALT5:** GPIO5_IO09	3V3	

LGA pad name	ConnectCore 8M Mini signal name	i.MX 8M Mini pad name	Multiplexing	Power group	Comments
P1	UART3_TX	ECSPI1_MOSI	**ALT0:** ECSPI1_MOSI **ALT1:** UART3_TX **ALT5:** GPIO5_IO07	3V3	
P29	SAI1_RXD1	SAI1_RXD1	**ALT0:** SAI1_RX_DATA1 **ALT1:** SAI5_RX_DATA1 **ALT3:** PDM_BIT_STREAM1 **ALT4:** CORESIGHT_TRACE1 **ALT5:** GPIO4_IO03 **ALT6:** SRC_BOOT_CFG1		
R1	UART3_RX	ECSPI1_SCLK	**ALT0:** ECSPI1_SCLK **ALT1:** UART3_RX **ALT5:** GPIO5_IO06	3V3	
R29	SAI1_RXD2	SAI1_RXD2	**ALT0:** SAI1_RX_DATA2 **ALT1:** SAI5_RX_DATA2 **ALT3:** PDM_BIT_STREAM2 **ALT4:** CORESIGHT_TRACE2 **ALT5:** GPIO4_IO04 **ALT6:** SRC_BOOT_CFG2		
T1	GND				
T29	UART4_TXD	UART4_TXD	**ALT0:** UART4_TX **ALT1:** UART2_RTS_B **ALT5:** GPIO5_IO29	VDD_UART	
U1	NC				
U29	UART4_RXD	UART4_RXD	**ALT0:** UART4_RX **ALT1:** UART2_CTS_B **ALT2:** PCIE1_CLKREQ_B **ALT5:** GPIO5_IO28	VDD_UART	

LGA pad name	ConnectCore 8M Mini signal name	i.MX 8M Mini pad name	Multiplexing	Power group	Comments
V1	I2C4_SCL (1V8)	I2C4_SCL	**ALT0:** I2C4_SCL **ALT1:** PWM2_OUT **ALT2:** PCIE1_CLKREQ_B **ALT5:** GPIO5_IO20	1V8	
V29	UART1_RX	SAI2_RXC	**ALT0:** SAI2_RX_BCLK **ALT1:** SAI5_TX_BCLK **ALT4:** UART1_RX **ALT5:** GPIO4_IO22	3V3	
W1	I2C4_SDA (1V8)	I2C4_SDA	**ALT0:** I2C4_SDA **ALT1:** PWM1_OUT **ALT5:** GPIO5_IO21	1V8	
W29	UART1_TX	SAI2_RXFS	**ALT0:** SAI2_RX_SYNC **ALT1:** SAI5_TX_SYNC **ALT2:** SAI5_TX_DATA1 **ALT3:** SAI2_RX_DATA1 **ALT4:** UART1_TX **ALT5:** GPIO4_IO21	3V3	
Y1	GPIO5_IO05	SPDIF_EXT_CLK	**ALT0:** SPDIF1_EXT_CLK **ALT1:** PWM1_OUT **ALT5:** GPIO5_IO05	3V3	
Y29	GND				
AA1	GPIO1_IO00	GPIO1_IO00	**ALT0:** GPIO1_IO00 **ALT1:** CCM_ENET_PHY_REF_CLK_ROOT **ALT5:** CCM_REF_CLK_32K **ALT6:** CCM_EXT_CLK1	3V3	
AA29	1V8				

LGA pad name	ConnectCore 8M Mini signal name	i.MX 8M Mini pad name	Multiplexing	Power group	Comments
AB1	NC				
AB29	NC				
AC1	NC				
AC29	NC				
AD1	NC				
AD29	BOOT_MODE1	BOOT_MODE1		1V8	
AE1	NC				
AE29	BOOT_MODE0	BOOT_MODE0		1V8	
AF1	GPIO5_IO04	SPDIF_RX	**ALT0:** SPDIF1_IN **ALT1:** PWM2_OUT **ALT5:** GPIO5_IO04	3V3	
AF2	GND				
AF3	GND				
AF4	GND				
AF5	GND				
AF6	GND				
AF7	GND				
AF8	GND				
AF9	GND				
AF10	GND				

LGA pad name	ConnectCore 8M Mini signal name	i.MX 8M Mini pad name	Multiplexing	Power group	Comments
AF11	GND				
AF12	GND				
AF13	GND				
AF14	GND				
AF15	GND				
AF16	GND				
AF17	GND				
AF18	GND				
AF19	GND				
AF20	GND				
AF21	GND				
AF22	GND				
AF23	GND				
AF24	GND				
AF25	GND				
AF26	GND				
AF27	GND				
AF28	GND				
AF29	MCA_IO10			VCC_MCA	

LGA pad name	ConnectCore 8M Mini signal name	i.MX 8M Mini pad name	Multiplexing	Power group	Comments
AG1	GPIO5_IO03	SPDIF_TX	**ALT0:** SPDIF1_OUT **ALT1:** PWM3_OUT **ALT5:** GPIO5_IO03	3V3	
AG2	GND				
AG3	GND				
AG4	GND				
AG5	GND				
AG6	GND				
AG7	GND				
AG8	GPIO3_IO22	SAI5_RXD1	**ALT0:** SAI5_RX_DATA1 **ALT1:** SAI1_TX_DATA3 **ALT2:** SAI1_TX_SYNC **ALT3:** SAI5_TX_SYNC **ALT4:** PDM_BIT_STREAM1 **ALT5:** GPIO3_IO22	3V3	
AG9	GPIO1_IO07	GPIO1_IO07	**ALT0:** GPIO1_IO07 **ALT1:** ENET1_MDIO **ALT5:** USDHC1_WP **ALT6:** CCM_EXT_CLK4	3V3	
AG10	GPIO1_IO11	GPIO1_IO11	**ALT0:** GPIO1_IO11 **ALT1:** USB2_OTG_ID **ALT4:** USDHC3_VSELECT **ALT5:** CCM_PMIC_READY	3V3	

LGA pad name	ConnectCore 8M Mini signal name	i.MX 8M Mini pad name	Multiplexing	Power group	Comments
AG11	GPIO1_IO08	GPIO1_IO08	**ALT0:** GPIO1_IO08 **ALT1:** ENET1_1588_EVENT0_IN **ALT5:** USDHC2_RESET_B	3V3	
AG12	GPIO1_IO09	GPIO1_IO09	**ALT0:** GPIO1_IO09 **ALT1:** ENET1_1588_EVENT0_OUT **ALT4:** USDHC3_RESET_B **ALT5:** SDMA2_EXT_EVENT0	3V3	
AG13	GPIO1_IO10	GPIO1_IO10	**ALT0:** GPIO1_IO10 **ALT1:** USB1_OTG_ID	3V3	
AG14	GPIO1_IO03	GPIO1_IO03	**ALT0:** GPIO1_IO03 **ALT1:** USDHC1_VSELECT **ALT5:** SDMA1_EXT_EVENT0	3V3	
AG15	GPIO3_IO08	NAND_DATA02	**ALT0:** NAND_DATA02 **ALT1:** QSPI_A_DATA2 **ALT2:** USDHC3_CD_B **ALT5:** GPIO3_IO08	1V8	
AG16	GND				
AG17	NC				
AG18	IMX8_ON_OFF	ONOFF		1.8 V Internal power rail	ON/OFF signal from the CPU. By default it shouldn't be used. This functionality is managed by the MCA.

LGA pad name	ConnectCore 8M Mini signal name	i.MX 8M Mini pad name	Multiplexing	Power group	Comments
AG19	JTAG_MOD	JTAG_MOD		1V8	Internal 10K pull-down resistor on the SOM.
AG20	JTAG_TCK	JTAG_TCK		1V8	
AG21	JTAG_TDO	JTAG_TDO		1V8	
AG22	VDD_SAI1				
AG23	GND				
AG24	NC				
AG25	GPIO3_IO14	NAND_DQS	**ALT0:** NAND_DQS **ALT1:** QSPI_A_DQS **ALT5:** GPIO3_IO14	1V8	
AG26	GPIO5_IO26	UART3_RXD	**ALT0:** UART3_RX **ALT1:** UART1_CTS_B **ALT2:** USDHC3_RESET_B **ALT5:** GPIO5_IO26	VDD_UART	
AG27	GPIO5_IO27	UART3_TXD	**ALT0:** UART3_TX **ALT1:** UART1_RTS_B **ALT2:** USDHC3_VSELECT **ALT5:** GPIO5_IO27	VDD_UART	
AG28	GPIO3_IO00 (1V8)	NAND_ALE	**ALT0:** NAND_ALE **ALT1:** QSPI_A_SCLK **ALT5:** GPIO3_IO00	1V8	
AG29	MCA_IO9			VCC_MCA	

LGA pad name	ConnectCore 8M Mini signal name	i.MX 8M Mini pad name	Multiplexing	Power group	Comments
AH1	1V8				
AH2	1V8				
AH3	1V8				
AH4	GND				
AH5	GND				
AH6	RESERVED				
AH7	NC				
AH8	GND				
AH9	NC				
AH10	POR_B	POR_B		1.8 V Internal power rail.	
AH11	NC				
AH12	RESERVED				

LGA pad name	ConnectCore 8M Mini signal name	i.MX 8M Mini pad name	Multiplexing	Power group	Comments
AH13	MUX_VSELECT			This pin selects the output voltage at MUX_3V3_1V8: ▪ Set low for 3.3V operation ▪ Set high for 1.8V operation	To use MUX_3V3_1V8 to power an external interface through USDHC2 bus (e.g microSD in the DVK) and automatically adapt voltage level to maximize performance, tie this line to pad AN5 (USDHC2_VSELECT).
AH14	GND				
AH15	NC				
AH16	NC				
AH17	GND				
AH18	VDDA_1V8				See Power supply architecture.
AH19	GND				

LGA pad name	ConnectCore 8M Mini signal name	i.MX 8M Mini pad name	Multiplexing	Power group	Comments
AH20	SAI1_RXC	SAI1_RXC	**ALT0:** SAI1_RX_BCLK **ALT1:** SAI5_RX_BCLK **ALT4:** CORESIGHT_TRACE_CTL **ALT5:** GPIO4_IO01		
AH21	GND				
AH22	SAI1_MCLK	SAI1_MCLK	**ALT0:** SAI1_MCLK **ALT1:** SAI5_MCLK **ALT2:** SAI1_TX_BCLK **ALT3:** PDM_CLK **ALT5:** GPIO4_IO20		
AH23	SAI1_TXFS	SAI1_TXFS	**ALT0:** SAI1_TX_SYNC **ALT1:** SAI5_TX_SYNC **ALT4:** CORESIGHT_EVENT0 **ALT5:** GPIO4_IO10		
AH24	SAI1_TXD6	SAI1_TXD6	**ALT0:** SAI1_TX_DATA6 **ALT1:** SAI6_RX_SYNC **ALT2:** SAI6_TX_SYNC **ALT4:** CORESIGHT_TRACE14 **ALT5:** GPIO4_IO18 **ALT6:** SRC_BOOT_CFG14		
AH25	SAI1_TXD3	SAI1_TXD3	**ALT0:** SAI1_TX_DATA3 **ALT1:** SAI5_TX_DATA3 **ALT4:** CORESIGHT_TRACE11 **ALT5:** GPIO4_IO15 **ALT6:** SRC_BOOT_CFG11		

LGA pad name	ConnectCore 8M Mini signal name	i.MX 8M Mini pad name	Multiplexing	Power group	Comments
AH26	SAI1_TXD4	SAI1_TXD4	**ALT0:** SAI1_TX_DATA4 **ALT1:** SAI6_RX_BCLK **ALT2:** SAI6_TX_BCLK **ALT4:** CORESIGHT_TRACE12 **ALT5:** GPIO4_IO16 **ALT6:** SRC_BOOT_CFG12		
AH27	JTAG_TDI	JTAG_TDI		1V8	
AH28	JTAG_TMS	JTAG_TMS		1V8	
AH29	NC				
AJ1	GND				
AJ2	VSYS2				
AJ3	VSYS2				
AJ4	VSYS2				
AJ5	GND				
AJ6	GND				
AJ7	GND				
AJ8	NC				
AJ9	GND				
AJ10	NC				
AJ11	PMIC_STANDBY	PMIC_STBY_REQ		1.8 V Internal power rail.	

LGA pad name	ConnectCore 8M Mini signal name	i.MX 8M Mini pad name	Multiplexing	Power group	Comments
AJ12	PWR_ON			VCC_MCA	Internal weak pull-up to VCC_MCA. Do not drive this line externally.
AJ13	NC				
AJ14	GND				
AJ15	NC				
AJ16	NC				
AJ17	GND				
AJ18	NC				
AJ19	NC				
AJ20	GND				
AJ21	SAI1_TXD0	SAI1_TXD0	**ALT0:** SAI1_TX_DATA0 **ALT1:** SAI5_TX_DATA0 **ALT4:** CORESIGHT_TRACE8 **ALT5:** GPIO4_IO12 **ALT6:** SRC_BOOT_CFG8		

LGA pad name	ConnectCore 8M Mini signal name	i.MX 8M Mini pad name	Multiplexing	Power group	Comments
AJ22	SAI1_RXD0	SAI1_RXD0	**ALT0:** SAI1_RX_DATA0 **ALT1:** SAI5_RX_DATA0 **ALT2:** SAI1_TX_DATA1 **ALT3:** PDM_BIT_STREAM0 **ALT4:** CORESIGHT_TRACE0 **ALT5:** GPIO4_IO02 **ALT6:** SRC_BOOT_CFG0		
AJ23	SAI1_TXD7	SAI1_TXD7	**ALT0:** SAI1_TX_DATA7 **ALT1:** SAI6_MCLK **ALT3:** PDM_CLK **ALT4:** CORESIGHT_TRACE15 **ALT5:** GPIO4_IO19 **ALT6:** SRC_BOOT_CFG15		
AJ24	SAI1_RXFS	SAI1_RXFS	**ALT0:** SAI1_RX_SYNC **ALT1:** SAI5_RX_SYNC **ALT4:** CORESIGHT_TRACE_CLK **ALT5:** GPIO4_IO00		
AJ25	SAI1_TXD5	SAI1_TXD5	**ALT0:** SAI1_TX_DATA5 **ALT1:** SAI6_RX_DATA0 **ALT2:** SAI6_TX_DATA0 **ALT4:** CORESIGHT_TRACE13 **ALT5:** GPIO4_IO17 **ALT6:** SRC_BOOT_CFG13		
AJ26	GND				

LGA pad name	ConnectCore 8M Mini signal name	i.MX 8M Mini pad name	Multiplexing	Power group	Comments
AJ27	BOOT_MODE3/TEST_MODE	TEST_MODE		1V8	Internal weak pull-down. Do not drive this line externally unless otherwise noted.
AJ28	BOOT_MODE2/JTAG_nTRST	JTAG_TRST_B	**ALT0:**JTAG_TRST_B	1V8	Internal weak pull-up. Do not drive this line externally unless otherwise noted.
AJ29	NC				
AK1	3V3				
AK2	VSYS2				
AK3	VSYS2				
AK4	VSYS2				
AK5	GND				
AK6	GND				
AK7	GND				
AK8	GND				

LGA pad name	ConnectCore 8M Mini signal name	i.MX 8M Mini pad name	Multiplexing	Power group	Comments
AK9	GND				
AK10	GND				
AK11	GND				
AK12	GND				
AK13	GND				
AK14	GND				
AK15	NC				
AK16	NC				
AK17	GND				
AK18	NC				
AK19	NC				
AK20	GND				
AK21	MIPI_CSI_DATA3_P	MIPI_CSI_D3_P		VDDA_1V8	
AK22	MIPI_CSI_DATA3_N	MIPI_CSI_D3_N		VDDA_1V8	
AK23	GND				
AK24	I2C3_SDA (1V8)	I2C3_SDA	**ALT0:** I2C3_SDA **ALT1:** PWM3_OUT **ALT2:** GPT3_CLK **ALT5:** GPIO5_IO19	1V8	

LGA pad name	ConnectCore 8M Mini signal name	i.MX 8M Mini pad name	Multiplexing	Power group	Comments
AK25	I2C3_SCL (1V8)	I2C3_SCL	**ALT0:** I2C3_SCL **ALT1:** PWM4_OUT **ALT2:** GPT2_CLK **ALT5:** GPIO5_IO18	1V8	
AK26	SAI1_TXD1	SAI1_TXD1	**ALT0:** SAI1_TX_DATA1 **ALT1:** SAI5_TX_DATA1 **ALT4:** CORESIGHT_TRACE9 **ALT5:** GPIO4_IO13 **ALT6:** SRC_BOOT_CFG9		
AK27	SAI1_TXD2	SAI1_TXD2	**ALT0:** SAI1_TX_DATA2 **ALT1:** SAI5_TX_DATA2 **ALT4:** CORESIGHT_TRACE10 **ALT5:** GPIO4_IO14 **ALT6:** SRC_BOOT_CFG10		
AK28	SAI1_TXC	SAI1_TXC	**ALT0:** SAI1_TX_BCLK **ALT1:** SAI5_TX_BCLK **ALT4:** CORESIGHT_EVENT1 **ALT5:** GPIO4_IO11		
AK29	NC				
AL2	3V3				
AL3	3V3				
AL4	GND				
AL5	GND				
AL6	VSYS				

LGA pad name	ConnectCore 8M Mini signal name	i.MX 8M Mini pad name	Multiplexing	Power group	Comments
AL7	VSYS				
AL8	VSYS				
AL9	GND				
AL10	GND				
AL11	GND				
AL12	MIPI_CSI_DATA1_P	MIPI_CSI_D1_P		VDDA_1V8	
AL13	MIPI_CSI_DATA1_N	MIPI_CSI_D1_N		VDDA_1V8	
AL14	GND				
AL15	MIPI_CSI_DATA0_P	MIPI_CSI_D0_P		VDDA_1V8	
AL16	MIPI_CSI_DATA0_N	MIPI_CSI_D0_N		VDDA_1V8	
AL17	GND				
AL18	GPIO3_IO06 (1V8)	NAND_DATA00	**ALT0:** NAND_DATA00 **ALT1:** QSPI_A_DATA0 **ALT5:** GPIO3_IO06	1V8	
AL19	RESERVED				
AL20	RESERVED				
AL21	MCA_CLKOUT32K			VCC_MCA	
AL22	MCA_IO13			VCC_MCA	
AL23	MCA_IO17			VCC_MCA	
AL24	MCA_IO16			VCC_MCA	

LGA pad name	ConnectCore 8M Mini signal name	i.MX 8M Mini pad name	Multiplexing	Power group	Comments
AL25	MCA_IO15			VCC_MCA	
AL26	MCA_IO14			VCC_MCA	
AL27	MCA_IO4			VCC_MCA	
AL28	NC				
AM3	3V3				
AM4	3V3				
AM5	GND				
AM6	GND				
AM7	CLKOUT1	CLKOUT1		1V8	
AM8	NC				
AM9	CLKOUT2	CLKOUT2		1V8	
AM10	CLKIN1	CLKIN1		1V8	
AM11	CLKIN2	CLKIN2		1V8	
AM12	GND				
AM13	MIPI_CSI_CLK_P	MIPI_CSI_CLK_P		VDDA_1V8	
AM14	MIPI_CSI_CLK_N	MIPI_CSI_CLK_N		VDDA_1V8	
AM15	GND				
AM16	MIPI_CSI_DATA2_P	MIPI_CSI_D2_P		VDDA_1V8	
AM17	MIPI_CSI_DATA2_N	MIPI_CSI_D2_N		VDDA_1V8	

LGA pad name	ConnectCore 8M Mini signal name	i.MX 8M Mini pad name	Multiplexing	Power group	Comments
AM18	GND				
AM19	RESERVED				
AM20	GND				
AM21	VCC_MCA				
AM22	RESERVED				
AM23	MCA_IO18			VCC_MCA	
AM24	MCA_VREF_OUT				
AM25	MCA_IO12			VCC_MCA	
AM26	MCA_IO11			VCC_MCA	
AM27	MCA_VIN_DET				
AN4	GPIO1_IO01	GPIO1_IO01	**ALT0:** GPIO1_IO01 **ALT1:** PWM1_OUT **ALT5:** CCM_REF_CLK_24M **ALT6:** CCM_EXT_CLK2	3V3	
AN5	GPIO1_IO04	GPIO1_IO04	**ALT0:** GPIO1_IO04 **ALT1:** USDHC2_VSELECT **ALT5:** SDMA1_EXT_EVENT1	3V3	
AN6	MIPI_DSI_CLK_N	MIPI_DSI_CLK_N		VDDA_1V8	
AN7	MIPI_DSI_CLK_P	MIPI_DSI_CLK_P		VDDA_1V8	
AN8	GND				
AN9	MIPI_DSI_DATA0_N	MIPI_DSI_D0_N		VDDA_1V8	

LGA pad name	ConnectCore 8M Mini signal name	i.MX 8M Mini pad name	Multiplexing	Power group	Comments
AN10	MIPI_DSI_DATA0_P	MIPI_DSI_D0_P		VDDA_1V8	
AN11	GND				
AN12	MIPI_DSI_DATA1_N	MIPI_DSI_D1_N		VDDA_1V8	
AN13	MIPI_DSI_DATA1_P	MIPI_DSI_D1_P		VDDA_1V8	
AN14	GND				
AN15	MIPI_DSI_DATA2_N	MIPI_DSI_D2_N		VDDA_1V8	
AN16	MIPI_DSI_DATA2_P	MIPI_DSI_D2_P		VDDA_1V8	
AN17	GND				
AN18	MIPI_DSI_DATA3_N	MIPI_DSI_D3_N		VDDA_1V8	
AN19	MIPI_DSI_DATA3_P	MIPI_DSI_D3_P		VDDA_1V8	
AN20	GND				
AN21	MCA_IO1			VCC_MCA	
AN22	MCA_IO2			VCC_MCA	
AN23	MCA_IO3			VCC_MCA	
AN24	SWD_CLK/PWR_IO			VCC_MCA	Input power ON/OFF line of the module (active low).
AN25	SYS_RESET			VCC_MCA	Input reset line of the module (active low).
AN26	SWD_DIO/MCA_IO0			VCC_MCA	

Note [1]This SDIO interface is connected to the Wireless chip on the wireless variants of the SOM.

These pads must remain unconnected unless when using a non-wireless variant of the module.
Pad D7 (WLAN_SD1_D7) is internally tied to pad F27 (WL_EN).
Pad D10 (WLAN_SD1_D6) is internally tied to pad F26 (BT_EN).

Module specifications

The following sections describe the specifications for the ConnectCore 8M Mini SOM.

Power consumption 91
Environmental specifications 92
Mechanical specifications 92
Antenna performance 92
MTBF 93
Socket options 93

Power consumption

This section contains information about the power consumption of the ConnectCore 8M Mini system-on-module. All measurements were performed on the ConnectCore 8M DVK platform running Digi Embedded Yocto.

All presented results were measured with ConnectCore 8M Mini variant -01 at ambient temperature (25ºC).

Note These power consumption numbers should be considered guidelines only, never as fixed or absolute values. Actual values will depend entirely upon individual setup and system application.

Power consumption use cases

The power consumption of the ConnectCore 8M Mini system-on-module was evaluated in the following use cases:

Power-off

To enter power-off mode, press the ON/OFF button of the carrier board for more than two seconds, or run:

```
~# poweroff
```

In this mode only the MCA is powered, which maintains the MCA RTC and other low-power functionality of the MCA, such as wake-up interrupts (ADC, tamper, keypad...).

Standby

To enter standby mode, press the ON/OFF button of the carrier board once, or run:

```
~# standby
```

In this mode, the system suspends to RAM and operation can be resumed without performing a new boot cycle. RAM memory is in self-refresh mode.

System idle

In this use case, the system is running Digi Embedded Yocto graphical image with standard daemons and a graphical desktop.

RTC

System on RTC (Real-time clock) mode keeping the time of the system, powered from a coin cell with no other power supply attached.

Results

State	SOM power consumption[1] (mW)
Power-off	1
Standby	25.85

State	SOM power consumption[1] (mW)
System idle	970
RTC	0.019

[1]SOM power consumption = P(R28) - P(R31) - P(R32)

Environmental specifications

- Operating temperature: -40 to 85 C.

CAUTION! Your final product may require additional thermal management such as passive (heatsink/spreader) or active (airflow) cooling to achieve the maximum operating temperature without exceeding the processor junction temp limit.

Mechanical specifications

See the ConnectCore 8M Mini product page for links to mechanical drawings and other design documents.

Antenna performance

Antenna location is important for optimal performance. The following suggestions help you achieve optimal antenna performance. Point the antenna up vertically (upright). Antennas radiate and receive the best signal perpendicular to the direction they point, so a vertical antenna's omnidirectional radiation pattern is strongest across the horizon.

Position the antennas away from metal objects whenever possible. Metal objects between the transmitter and receiver can block the radiation path or reduce the transmission distance. Objects that are often overlooked include:

- Metal poles
- Metal studs
- Structure beams
- Concrete, which is usually reinforced with metal rods

If you place the device inside a metal enclosure, use an external antenna. Common objects that have metal enclosures include:

- Vehicles
- Elevators
- Ventilation ducts
- Refrigerators

Use the following additional guidelines for optimal antenna performance:

- Do not place the product with the antenna inside a metal enclosure.
- Do not place any ground planes or metal objects above or below the antenna.

- For best results, mount the antenna at the edge of the host PCB. Ensure that the ground, power, and signal planes are vacant immediately below the antenna section.

MTBF

MTBF (Mean Time Before Failure) has been estimate using the method of prediction Telcordia Reliability Prediction Procedure, SR-332, Issue 4, “Parts Count” Method.

The following assumptions have been made:

- An average ambient temperature of +23°C.
- Electrical Stress of 50%
- Quality Level II for all components
- Mission profile considered in this analysis is a yearly continuous operation i.e. always operating On, 365 days per year.
- Average module temperature rise = 17°C
- Two different environmental factors have been considered:
- An environmental factor of π~E~ = 1.2 is defined in SR-332 for Ground, Fixed, Uncontrolled (limited) environments (GL).
- An environmental factor of π~E~ = 2 is defined in SR-332 for Ground, Mobile environments (GM).

Product variant	Ground fixed, Uncontrolled (limited) – MTTF (hours)	Ground Mobile – MTTF (hours)
ConnectCore 8M Mini wireless	2 617 801	1 569 859
ConnectCore 8M Mini non-wireless	3 257 329	1 953 125

Failure rate and MTTF (Mean Time To Failure) for different operational temperature:

Operating temperature (°C)	30	40	50	60	70
ConnectCore 8M Mini wireless	3 401 361	2 617 801	1 941 748	1 404 494	997 009
ConnectCore 8M Mini non-wireless	4 347 826	3 257 329	2 369 668	1 680 672	1 176 471

Note Values above assume MTTF Ground Fixed, Uncontrolled (limited) x1.2 environment.

Other environmental stresses lower MTTF values.

Socket options

For testing, prototyping, and other primarily development-related purposes, Digi International and E-tec Interconnect AG have developed sockets allowing the easy insertion and removal of modules in a carrier board design.

All drawings, user instructions, schematics and PCB footprints are posted on the ConnectCore 8M Mini technical support website.

Note The ConnectCore 8M Mini Development Board (Digi P/N CC-WMX8MM-KIT) has been designed to support an LPF474-129M-32ACEW55L socket, and can be used as a reference design.

All sockets are sold and built by E-tec Interconnect AG. The table below provides an overview of the available part numbers.

Socket model	E-tec part number
ConnectCore 8 Castellated	LPQ118-1290-32AAEW55L rev1
ConnectCore 8 LGA	LPF474-129M-32ACEW55L rev1

Note Please direct all socket-related purchase inquiries to E-tec Interconnect AG (info@e-tec.com).

Assembly instructions

Moisture sensitivity and shelf life 96
Mounting 96
Stencil 96
SMT process parameter reference - Castellation and LGA applications 96
Reflow oven profile 97

Moisture sensitivity and shelf life

The ConnectCore 8M Mini is classified as a Level 3 Moisture Sensitive Device in accordance with IPC/JEDEC J-STD-020.

1. Calculated shelf life in sealed packaging: 12 months at <40°C and <90% relative humidity (RH).
2. Environmental condition during production: 30°C / 60% RH according to IPC/JEDEC J-STD-033C paragraph 5.
3. After module is removed from sealed packaging, modules that will be subjected to reflow solder temperatures are required to be:
   a. Mounted within 168 hours.
   b. Stored per J-STD-033.
4. Baking is required, before mounting if:
   a. the packaging humidity indicator indicates 10% RH or higher.
   b. either 3a or 3b are not met.
5. If baking is required, bake modules in trays for 4-6 hours at 125°C; maximum stacking height is 10 trays.

Mounting

The ConnectCore 8M Mini has been designed with easy integration into existing SMT processes in mind. This section contains guidance for mounting the module on your carrier board.

The module can be configured and mounted in a Castellation OR Land Grid Array (LGA) form.

Modules are not sealed and therefore they should not be subjected to a wash cycle or similar treatment where condensation could occur.

Stencil

For both castellation AND LGA applications, Digi recommends a laser cut and/or electro- formed stencil. Based on the actual coplanarity characteristics of your carrier board, adjustments may be required to determine the optimal solder paste volume.

SMT process parameter reference - Castellation and LGA applications

Process	SMT process	Specification recommendations
Screen Print	Solder paste	SAC 305 No-Clean (Alpha OM-340 or equivalent)
	Stencil thickness	0.100 mm / 4mil
	Recommended aperture size	LGA – 0.4 to 0.5 mm circle or rounded square Castellation – 1:1 with pad size
	Paste alignment	20% maximum off center of the pad

Process	SMT process	Specification recommendations
PnP	Placement nozzle	Largest available on machine
	Nozzle pick surface	Module center
	Speed	Slowest possible with PnP machine
	Placement sequence	Last, if possible
	Placement alignment	10% maximum off center of pad
Reflow	See Reflow oven profile.	

Reflow oven profile

- Keep SoM below 238°C during the reflow cycle for castellation AND LGA applications.
- Time Above Liquidous (TAL) is recommended to be between 55 to 65 seconds.
- Use of 40AWG K-type thermocouple and M.O.L.E or equivalent thermal profiler is recommended.

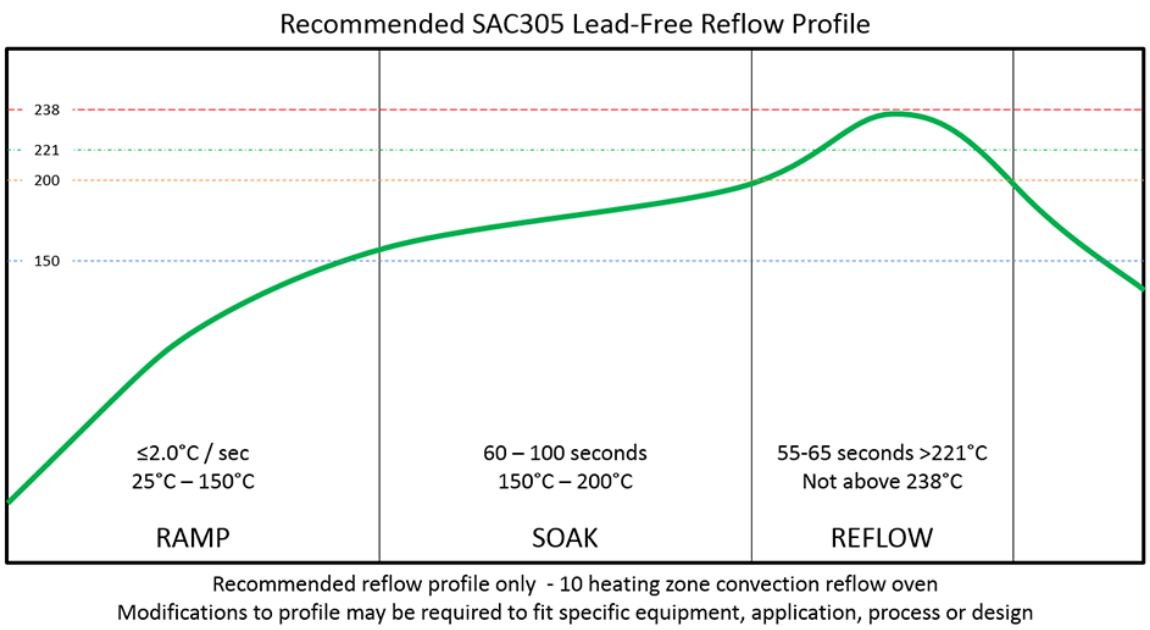

Two thermocouple locations are recommended to achieve proper attachment of SoM:

- For castellation applications, one thermocouple located on a castellation (preferable a power or ground castellation) and a second located near the underside center of the SOM to ensure SOM is not exposed to excessive temperatures.
- For LGA applications, one thermocouple located on the outer-most row (preferable a power or ground pad) and a second located near the underside center of the SOM to ensure SOM is not exposed to excessive temperatures.

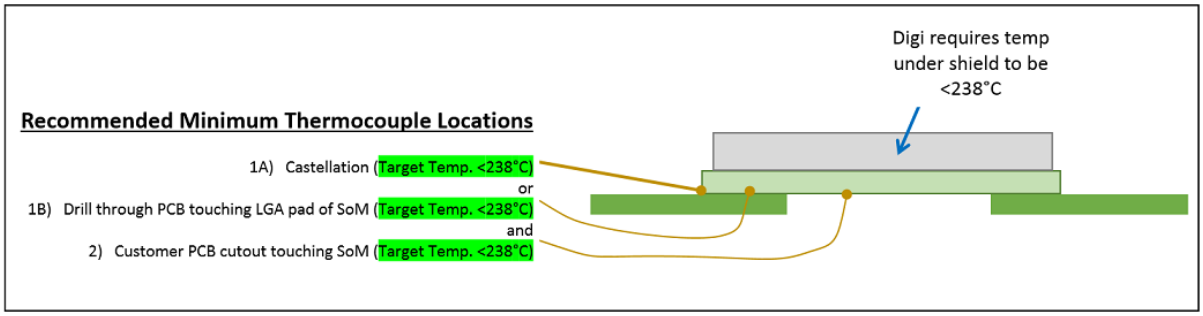

Note Digi recommends X-ray analysis after reflow to confirm proper mounting and solder reflow.

The ConnectCore 8M Mini is approved to withstand a total of four (4) reflow cycles. Two (2) reflow cycles are required for manufacturing the ConnectCore 8M Mini. Two (2) reflow cycles are remaining for mounting the module on the carrier board. Digi strongly recommends soldering the ConnectCore 8M Mini during the last reflow cycles of the carrier board manufacturing process.

Regulatory information and certifications

Note The ConnectCore 8M Mini module complies with Part 15 of the United States FCC rules and regulations.

United States FCC 100
Europe and UK 103
Canada (IC) 106
Japan 108
Bluetooth 110

United States FCC

The ConnectCore 8M Mini module complies with Part 15 of the FCC rules and regulations. Compliance with the labeling requirements, FCC notices and antenna usage guidelines is required. To fulfill FCC Certification, the OEM must comply with the following regulations:

The system integrator must ensure that the text on top side of the module is placed on the outside of the final product.

The ConnectCore 8M Mini module may only be used with approved antennas. (See FCC-approved antennas.)

Labeling requirements

WARNING! The Original Equipment Manufacturer (OEM) must ensure that FCC labeling requirements are met. This includes a clearly visible label on the outside of the final product enclosure that displays the contents shown below. Required FCC Label for OEM products containing the ConnectCore 8M Mini module.

Contains FCC ID: MCQ-CCIMX8MN

This device complies with part 15 of the FCC Rules. Operation is subject to the following two conditions: (1) This device may not cause harmful interference, and (2) this device must accept any interference received, including interference that may cause undesired operation.

Maximum power and frequency specifications (FCC)

RF band	Peak antenna gain	Technology	Channel bandwidth	Channel number (Center frequency, MHz)
2.4 GHz	2.5 dBi	BT + EDR Bluetooth LE	1	79 non-overlapping channels: 0 (2400) to 78 (2480)
			2	40 non-overlapping channels: 0 (2402) to 39 (2480)
		WLAN	20	1(2412), 2(2417), 3(2422), 4(2427), 5(2432), 6 (2437), 7(2442), 8(2447), 9 (2452), 10(2457), 11 (2462)
			40	3(2422), 4(2427), 5(2432), 6(2437), 7(2442), 8 (2447), 9(2452)
5 GHz	4.6 dBi	WLAN	20	36(5180), 40(5200), 44(5220), 48(5240), 52 (5260), 56(5280), 60(5300), 64 (5320), 100(5500), 104(5520), 108(5540), 112(5560), 116(5580), 120 (5600), 124(5620), 128(5640), 132(5660), 136 (5680), 140(5700), 149 (5745), 153(5765), 157 (5785), 161(5805), 165(5825)

RF band	Peak antenna gain	Technology	Channel bandwidth	Channel number (Center frequency, MHz)
			40	38(5190), 46(5230), 54(5270), 62(5310), 102 (5510), 110(5550), 118(5590), 126(5630), 134 (5670), 151(5755), 159(5795)
			80	42(5210), 58(5290), 106(5530), 122(5610), 155 (5775)

FCC notices

IMPORTANT: The ConnectCore 8M Mini module has been certified by the FCC for use with other products without any further certification (as per FCC section 2.1091). Modifications not expressly approved by Digi could void the user's authority to operate the equipment.

IMPORTANT: OEMs must test final product to comply with unintentional radiators (FCC section 15.107 & 15.109) before declaring compliance of their final product to Part 15 of the FCC Rules.

IMPORTANT: The ConnectCore 8M Mini module has been certified for remote and base radio applications. If the module will be used for portable applications, the device must undergo SAR testing. This equipment has been tested and found to comply with the limits for a Class B digital device, pursuant to Part 15 of the FCC Rules. These limits are designed to provide reasonable protection against harmful interference in a residential installation. This equipment generates uses and can radiate radio frequency energy, and if not installed and used in accordance with the instructions, may cause harmful interference to radio communications. However, there is no guarantee that interference will not occur in a particular installation. If this equipment does cause harmful interference to radio or television reception, which can be determined by turning the equipment off and on, the user is encouraged to try to correct the interference by one or more of the following measures: Re-orient or relocate the receiving antenna, Increase the separation between the equipment and receiver, Connect equipment and receiver to outlets on different circuits, or Consult the dealer or an experienced radio/TV technician for help.

IMPORTANT: This module has been tested and found to comply with the following requirements for Modular Approval.

Part 15.247 - Operation within the bands 902-928 MHz, 2400-2483.5 MHz, and 5725-5850 MHz.

Part 15.407 – General technical requirements.

FCC-approved antennas

The ConnectCore 8M Mini module can be installed utilizing antennas and cables constructed with non-standard connectors (RPSMA, RPTNC, and so on).

The modules are FCC approved for fixed base station and mobile applications for the channels indicated in the tables below. If the antenna is mounted at least 20 cm (8 in) from nearby persons, the application is considered a mobile application. Antennas not listed in the table must be tested to comply with FCC Section 15.203 (Unique Antenna Connectors) and Section 15.247 (Emissions).

The following table shows the antenna that was used to certify the ConnectCore 8M Mini wireless module. This antenna can be replaced by others, however further certification testing is required. The number of tests to be carried out can be decreased by using an antenna of the same type, i.e. dualband omnidirectional dipole, showing lower peak gain. In such case, only a spot check may be required by the certification laboratories to keep current certifications valid according to FCC regulations. If replacing by an antenna with higher gain, complete radiated tests according to FCC regulations are required by the certification laboratories.

Antenna used to certify the ConnectCore 8M Mini wireless module

Antenna type	Supplier	Antenna part no.	Freq. (MHz)	Peak antenna gain (dBi)	Directional gain (dBi)
PCB	YAGEO	ANTX100P001B24553	2402~2480	4.6	7.61
			5150~5250	4.9	7.91
			5250~5350	3.9	6.91
			5470~5725	5.1	8.11
			5725~5850	5.1	8.11
PCB	TAOGLAS	FXP830.07.0100C *	2402~2480	3.32	6.33
			5150~5250	4.7	7.71
			5250~5350	4.7	7.71
			5470~5725	4.7	7.71
			5725~5850	4.7	7.71
Dipole	TAOGLAS	GW.48.A151	2402~2480	3.42	6.43
			5150~5250	4.56	7.57
			5250~5350	4.56	7.57
			5470~5725	4.56	7.57
			5725~5850	4.56	7.57
Dipole	Linx	ANT-DB1-RAF-RPS	2402~2480	2.5	5.51
			5150~5250	4.6	7.61
			5250~5350	4.6	7.61
			5470~5725	4.6	7.61
			5725~5850	4.6	7.61
PCB	Ethertronic	1001932	2402~2480	2.5	5.51
			5150~5250	5	8.01
			5250~5350	5	8.01
			5470~5725	5	8.01
			5725~5850	5	8.01

Antenna type	Supplier	Antenna part no.	Freq. (MHz)	Peak antenna gain (dBi)	Directional gain (dBi)
PCB	TAOGLAS	FXP831.07.0100C	2402~2480	3	6.01
			5150~5250	5.5	8.51
			5250~5350	5.5	8.51
			5470~5725	5.5	8.51
			5725~5850	5.5	8.51

***** Antenna gain in free space

Note If using the RF module in a portable application (for example - if the module is used in a hand-held device and the antenna is less than 20 cm (8 in) from the human body when the device is in operation): The integrator is responsible for passing additional SAR (Specific Absorption Rate) testing based on FCC rules 2.1091 and FCC Guidelines for Human Exposure to Radio Frequency Electromagnetic Fields, OET Bulletin and Supplement C. The testing results will be submitted to the FCC for approval prior to selling the integrated unit. The required SAR testing measures emissions from the module and how they affect the person.

RF exposure

CAUTION! To satisfy FCC RF exposure requirements for mobile transmitting devices, a separation distance of 20 cm (8 in) or more should be maintained between the antenna of this device and persons during device operation. To ensure compliance, operations at closer than this distance are not recommended. The antenna used for this transmitter must not be co-located in conjunction with any other antenna or transmitter. The preceding statement must be included as a CAUTION statement in OEM product manuals in order to alert users of FCC RF Exposure compliance.

Operating frequency

- 802.11 b/g/n: 2412-2462 MHz
- 802.11 a/n/ac : 5150-5250 MHz; 5250-5350 MHz; 5470-5725MHz; 5725-5850 MHz
- Bluetooth : 2402-2480 MHz

Europe and UK

- 2.412 to 2.472 GHz; 13 channels
- 5.180 to 5.320 GHz; 8 channels
- 5.500 to 5.700 GHz, 8 channels (excludes 5.600 to 5.640 GHz)

CE mark

The ConnectCore 8M Mini module is certified for use in several European countries. For information, visit www.digi.com/resources/certifications.

If the ConnectCore 8M Mini module is incorporated into a product, the manufacturer must ensure compliance of the final product with articles 3.1a and 3.1b of the RE Directive (Radio Equipment Directive). A Declaration of Conformity must be issued for each of these standards and kept on file as described in the RE Directive (Radio Equipment Directive).

Furthermore, the manufacturer must maintain a copy of the ConnectCore 8M Mini module user manual documentation and ensure the final product does not exceed the specified power ratings, antenna specifications, and/or installation requirements as specified in the user manual. If any of these specifications are exceeded in the final product, a submission must be made to a notified body for compliance testing to all required standards.

This equipment should be installed and operated with a minimum distance of 20 cm between the radiator and your body.

CE and UKCA OEM labeling requirements

The CE and UKCA markings must be clearly visible and legible when you affix it to the product. If this is not possible, you must attach these marks to the packaging (if any) or accompanying documents.

CE labeling requirements

The “CE” marking must be affixed to a visible location on the OEM product. The following figure shows CE labeling requirements.

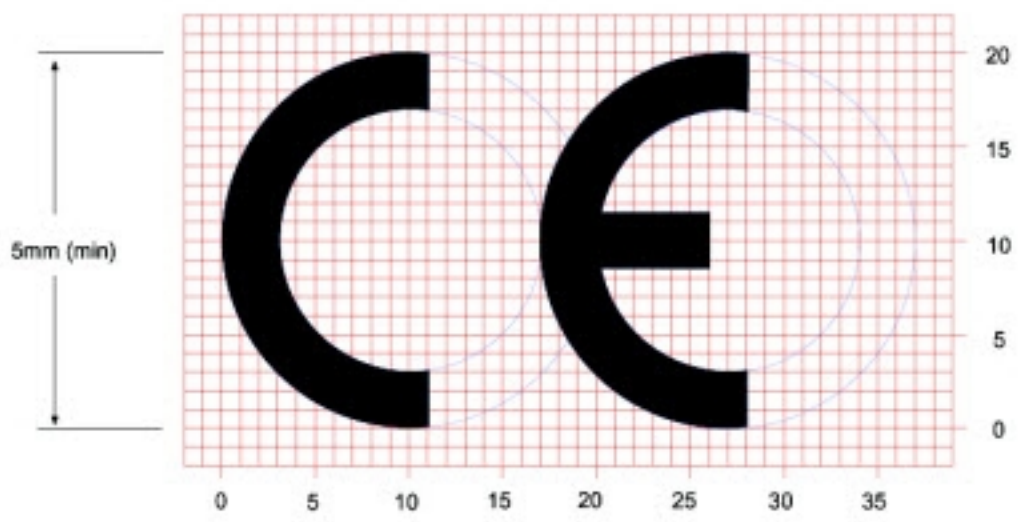

The CE mark shall consist of the initials “CE” taking the following form:

- If the CE marking is reduced or enlarged, the proportions given in the above graduated drawing must be respected.
- The CE marking must have a height of at least 5 mm except where this is not possible on account of the nature of the apparatus.
- The CE marking must be affixed visibly, legibly, and indelibly.

UK Conformity Assessed (UKCA) labeling requirements

See https://www.gov.uk/guidance/using-the-ukca-marking for further details.

You must make sure that:

- if you reduce or enlarge the size of your marking, the letters forming the UKCA marking must be in proportion to the version set out below
- the UKCA marking is at least 5 mm in height – unless a different minimum dimension is specified in the relevant legislation
- the UKCA marking is easily visible, legible (from 1 January 2023 it must be permanently attached)
- the UKCA marking can take different forms (for example, the colour does not have to be solid), as long as it remains visible, legible and maintains the required proportions.

Important note

Digi customers assume full responsibility for learning and meeting the required guidelines for each country in their distribution market. Refer to the radio regulatory agency in the desired countries of operation for more information.

Declarations of Conformity

Digi has issued Declarations of Conformity for the ConnectCore 8M Mini module concerning emissions, EMC, and safety. For more information, see http://www.digi.com/resources/certifications.

Important note

Digi customers assume full responsibility for learning and meeting the required guidelines for each country in their distribution market. Refer to the radio regulatory agency in the desired countries of operation for more information.

Approved antennas

The same antennas have been approved for Europe as stated in the FCC table for use with the ConnectCore 8M Mini module.

Country list

AT	BE	BG	CZ	DK
EE	FR	DE	IS	IE
IT	EL	ES	CY	LV
LI	LT	LU	HU	MT
NL	NO	PL	PT	RO
SI	SK	TR	FI	SE
CH	UK	HR		

Note This device is restricted to indoor use only when operating in the 5150-5350MHz frequency range within all member states.

Radio Type / Description		Transmitter Frequency (MHz)	Maximum Output Power
Bluetooth	BR+EDR	2402 ~ 2480	15.86 dBm
	Low Energy	2402 ~ 2480	6.88 dBm
WLAN 2.4G	802.11b	2412 ~ 2472	19.24 dBm
	802.11g	2412 ~ 2472	19.31 dBm
	802.11n 20	2412 ~ 2472	19.54 dBm
	802.11n 40	2422 ~ 2462	19.45 dBm
WLAN 5G	802.11a	5150 ~ 5350	22.16 dBm
		5470 ~ 5725	21.99 dBm
		5725 ~ 5850	13.17 dBm
	802.11n_20M 802.11ac_20M	5150 ~ 5350	22.22 dBm
		5470 ~ 5725	22.00 dBm
		5725 ~ 5850	13.16 dBm
	802.11n_40M 802.11ac_40M	5150 ~ 5350	22.55 dBm
		5470 ~ 5725	21.82 dBm
		5725 ~ 5850	13.28 dBm
	80211ac_80M	5150 ~ 5350	21.52 dBm
		5470 ~ 5725	20.90 dBm
		5725 ~ 5850	13.15 dBm

Canada (IC)

IC: 1846A-CCIMX8MN

PMN: ConnectCore 8M Mini

HVIN: CC8MN

Canadian Notice

This device contains licence-exempt transmitter(s)/receiver(s) that comply with Innovation, Science and Economic Development Canada's licence-exempt RSS(s). Operation is subject to the following two conditions:

1. This device may not cause interference.
2. This device must accept any interference, including interference that may cause undesired operation of the device.

Avis Canadien

L'émetteur/récepteur exempt de licence contenu dans le présent appareil est conforme aux CNR d'Innovation, Sciences et Développement économique Canada applicables aux appareils radio exempts de licence. L'exploitation est autorisée aux deux conditions suivantes :

1. L'appareil ne doit pas produire de brouillage;
2. L'appareil doit accepter tout brouillage radioélectrique subi, même si le brouillage est susceptible d'en compromettre le fonctionnement.

Labeling requirements

Labeling requirements for Industry Canada are similar to those of the FCC.

Required End Product Labeling

Any device incorporating this module must include an external, visible, permanent marking or label which states: "Contains IC : 1846A-CCIMX8MN"

Obligation d'étiquetage du produit final:

Tout dispositif intégrant ce module doit comporter un externe, visible, marquage permanent ou une étiquette qui dit: "Contient IC : 1846A-CCIMX8MN"

Transmitters with detachable antennas

This radio transmitter (IC: 1846A-CCIMX8MN) has been approved by Industry Canada to operate with the antenna types listed in the table above with the maximum permissible gain and required antenna impedance for each antenna type indicated. Antenna types not included in this list, having a gain greater than the maximum gain indicated for that type, are strictly prohibited for use with this device.

Le présent émetteur radio (IC: 1846A-CCIMX8MN) a été approuvé par Industrie Canada pour fonctionner avec les types d'antenne énumérés ci-dessous et ayant un gain admissible maximal et l'impédance requise pour chaque type d'antenne. Les types

d'antenne non inclus dans cette liste, ou dont le gain est supérieur au gain maximal indiqué, sont strictement interdits pour l'exploitation de l'émetteur.

Under Industry Canada regulations, this radio transmitter may only operate using an antenna of a type and maximum (or lesser) gain approved for the transmitter by Industry Canada. To reduce potential radio interference to other users, the antenna type and its gain should be so chosen that the equivalent isotropically radiated power (e.i.r.p.) is not more than that necessary for successful communication.

Conformément à la réglementation d'Industrie Canada, le présent émetteur radio peut fonctionner avec une antenne d'un type et d'un gain maximal (ou inférieur) approuvé pour l'émetteur par Industrie Canada. Dans le but de réduire les risques de brouillage radioélectrique à l'intention des autres utilisateurs, il faut choisir le type d'antenne et son gain de sorte que la puissance isotrope rayonnée équivalente (p.i.r.e.) ne dépasse pas l'intensité nécessaire à l'établissement d'une communication satisfaisante.

The ConnectCore 8M Mini module is for professional (OEM) installation only.

Le module ConnectCore 8M Mini doit impérativement être installé par un professionnel (OEM).

RF exposure

To satisfy Industry Canada RF exposure requirements, a separation distance of 20 cm or more should be maintained between the antenna of this device and persons during device operation.

Pour satisfaire aux exigences d'Industrie Canada concernant l'exposition RF, une distance égale ou supérieure à 20cm doit être respectée entre les antennes de ce produit et les personnes se trouvant à proximité.

The preceding statement must be included as a CAUTION statement in OEM product manuals in order to alert users of Industry Canada RF Exposure compliance.

Cette information doit être incluse dans le manuel du produit OEM afin d'alerter les utilisateurs sur la nécessité de respecter l'exposition RF d'Industrie Canada.

Approved antennas

The same antennas have been approved for Canada as stated in the FCC table for use with the ConnectCore 8M Mini module.

Japan

電波法により5GHz帯は屋内使用に限ります。

This device has been granted a designation number by Ministry of Internal Affairs and Communications according to:

Ordinance concerning Technical Regulations Conformity Certification etc. of Specified Radio Equipment (特定無線設備の技術基準適合証明等に関する規則).

- Article 2, Paragraph 1, Item 19, 19-3, 19-3-2 Category: WW, XW, YW
- Model/Name of equipment: ConnectCore 8M Mini
- Radio label marking:
  - R: 202-SMI060
  - T: D 20-0019 202

This device should not be modified (otherwise the granted designation number will be invalid).

- 2.412 to 2.472 GHz; 13 channels
- 5.180 to 5.320 GHz; 8 channels
- 5.500 to 5.700 GHz; 11 channels

Approval Label (MIC Marking)

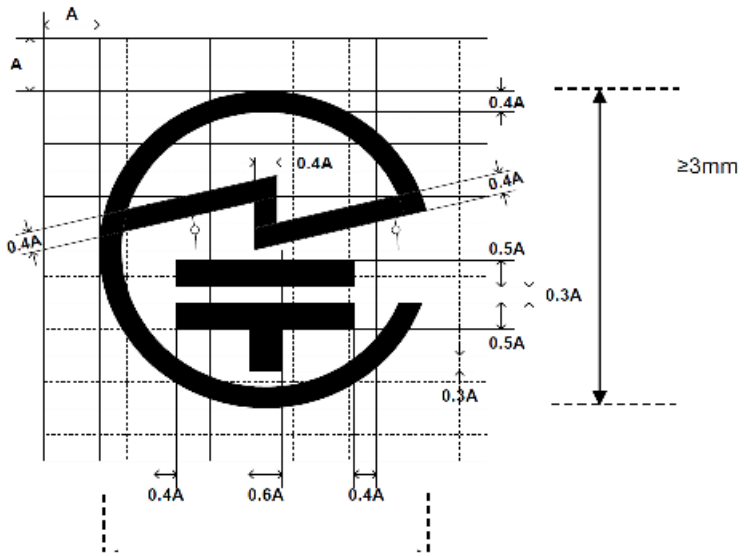

Label text

Note Due to space constraints, the ConnectCore 8M Mini module label doesn't support radio marking for Japan. If space allows, end product label should support radio marking for Japan. If not, radio marking shall be documented in the user manual.

Note The warning "Indoor only(5GHz)" must go on the end product – or E Label (Display).

Master station: Indoor only
親局: 当該無線設備の送信は、屋内のみにおいて使用可能である旨

Slave station: The transmission of radio equipment is indoors use only (Except when communicating with 5.2GHz high power base stations or relay stations)
子局:当該無線設備の送信は、5.2GHz帯高出力データ通信システムの基地局または陸上移動中継局と通信する場合を除き、屋内においてのみ可能である旨。

If the device is too small it can be displayed on the user manual and on the packaging or container.

Bluetooth

Products using ConnectCore 8M Mini Bluetooth interface need to apply for their own end product listing (EPL) at the Bluetooth SIG. At the hardware level, the ConnectCore 8M Mini is listed as a Controller Subsystem under the following identifiers:

- QDID # 110838
- Declaration ID # D054203

Note For declaration details, see https://launchstudio.bluetooth.com/ListingDetails/125073.

The Digi BlueZ Bluetooth library in the Linux firmware is listed as a Host Subsystem under the following identifiers:

- QD ID # 99403
- Declaration ID # D037483

You can combine these hardware and firmware elements into a new end product that is Bluetooth Sig-qualified with no additional Bluetooth testing, as long as you do not introduce any modifications to the Bluetooth design.

Once your end product is listed, you can label your product as a Bluetooth device.